WATERCO

Spare Parts Catalogue

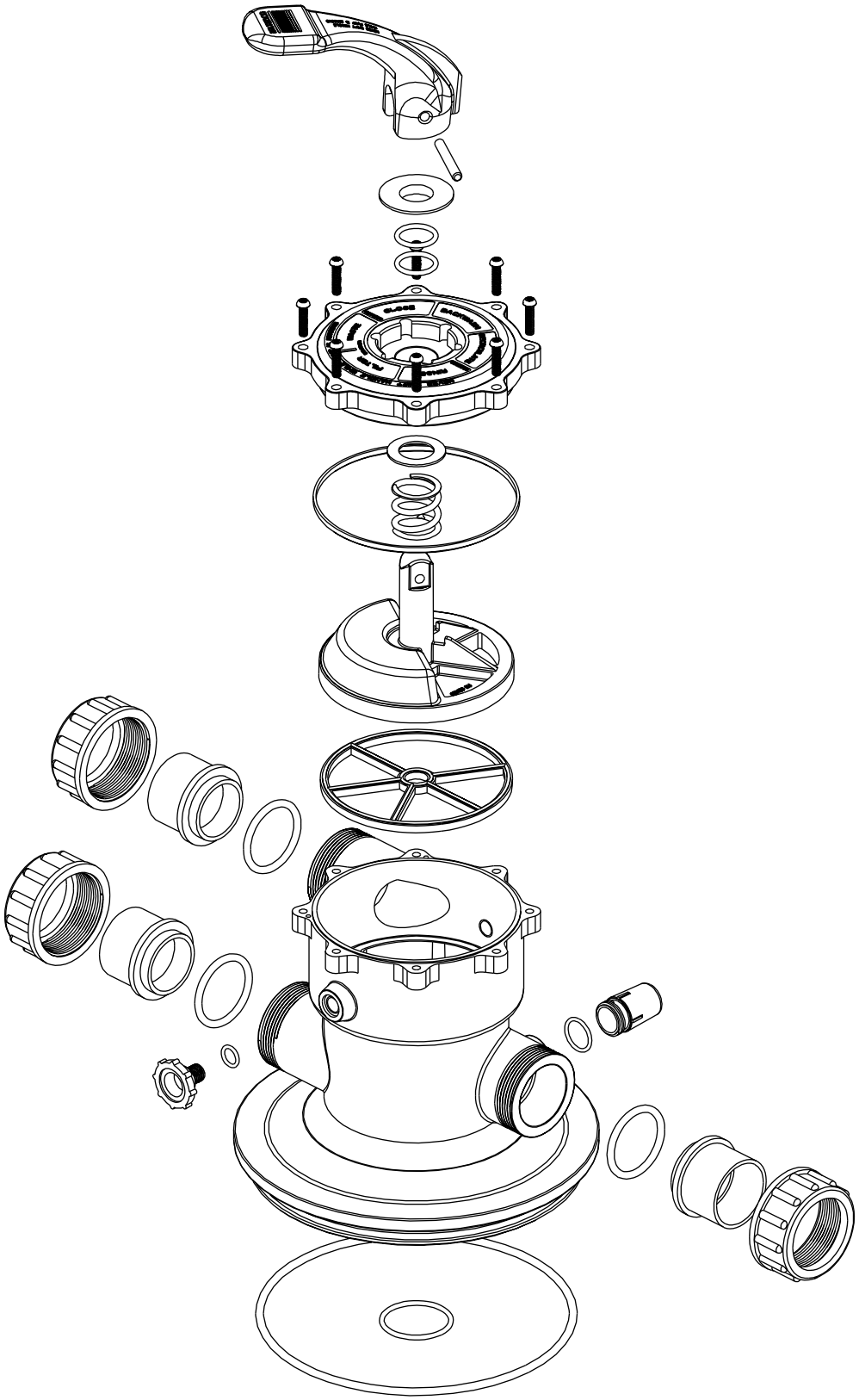

Aquamite

Part Number	Product Description	Diagram No.	LIST PRICE
635029EM	Motor 0.37kW single phase motor	1	£204.67
635030EM	Motor 0.55kW single phase motor	1	£204.67
635034EM	Motor 0.75kW single phase motor	1	£204.67
631781	Motor slinger (for 635034E)	n/s	£2.38
635072	Pump foot	2	£6.86
635074	Pump foot insert	n/s	£2.79
S1226911	Pump body o ring	5	£2.05
6340162	Mechanical seal (316 S/S)	6	£32.75
63401625	Mechanical seal (Silicon Carbide S/S Viton)	6	£83.22
635064	Impeller (Aquamite 33)	6	£33.43
635065	Impeller (Aquamite 50)	7	£33.43
635066	Impeller (Aquamite 75)	7	£33.43
635067	Impeller (Aquamite 100)	7	£33.43
635068	Impeller (Aquamite 125)	7	£33.43
S1228633	Shim (set of 3)	n/s	£2.59
635061	Diffuser	8	£16.11
635060	Diffuser gasket	9	£2.81
635082	Pump face Hair/Lint pot body	10	£84.58
S096871	Drain plug	11	£1.46
122243B	1½" half union c/w o ring	12	£3.79
122245B	50mm European metric half union c/w o ring	12	£3.79
W02213	Half union o ring	13	£2.53
635085	H/L pot basket	14	£6.75
635084	H/L pot lid o ring	15	£3.34
635083	H/L Pot lid	16	£22.85
63505321	Aquamite multi pack M8 bolts & washers	17/18	£5.96
	2 x 635053 (M8 x 30 bolt)		
	4 x 630218 (M8 washer)		
	2 x 6350540 (M8 x 40 bolt)		
63506351	Aquamite/Aquastream Adaptor Kit:-		£68.98
	63506340 - Square bracket kit	4/19	
	S1290816 - Screw M3x30mm Pan Head SS (each, 4 required)	19	
	6340165 - Flange Protector kit	20	
	63400833 - Screw # 4 x 3/8" pan head SS (each, 2 required)	21	
	6340162 - Mechanical Seal SS 316	6	
85517	Solar Insert Check Valve	22	£3.93
634086	Lid Toolbar (suits all pumps)	n/s	£5.72
6340451	Capacitors for Aquamite 033 & 050	n/s	£30.02
6340452	Fans for Aquamite 033 & 050	n/s	£5.12
6340444	Fan covers for Aquamite 033 & 050	n/s	£11.26
6340446	Capacitors for Aquamite 075, 100 & 125	n/s	£34.00
6340454	Fans for Aquamite 075, 100 & 125	n/s	£6.48
6340440	Fan covers for Aquamite 075, 100 & 125		£11.26

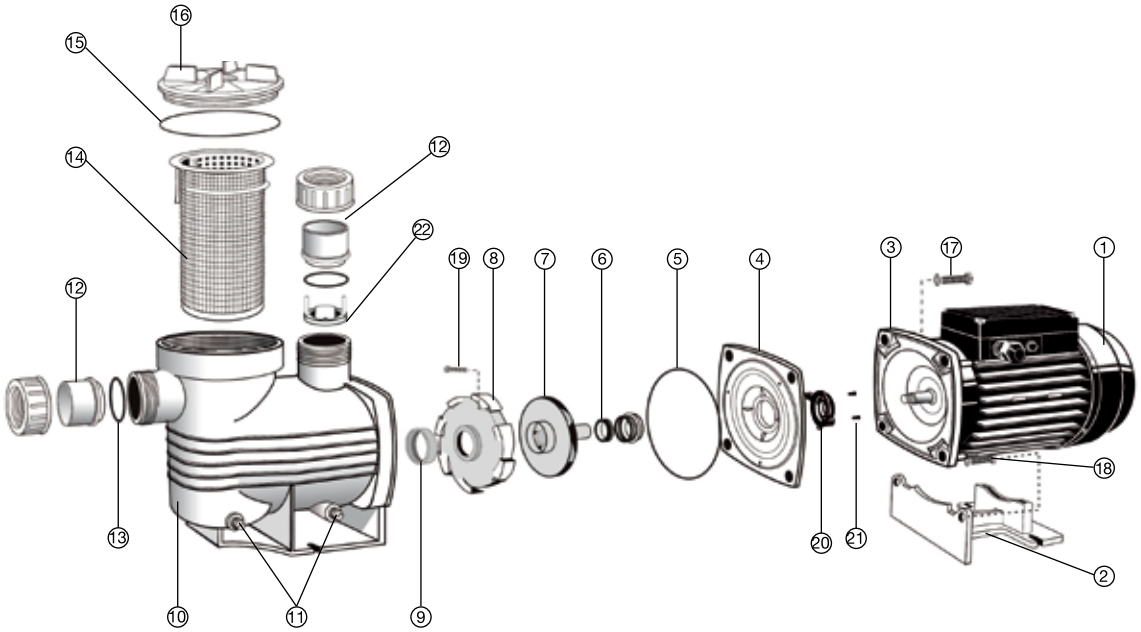

Part	Product Description	Diagram No.	LIST PRICE
635063	Adaptor plate	1	£16.92
6350632	Adaptor kit (Adaptor plate plus Flange protector kit)	n/s	£68.98
S1226911	Body o ring	2	£2.05
6340162	Mechanical seal (316 s/s)	3	£32.75
63401625	Mechanical seal (Silicon Carbide S/S Viton)	3	£83.22
635065	Impeller (Aquastream 50)	4	£33.43
635066	Impeller (Aquastream 75)	4	£33.43
635067	Impeller (Aquastream 100)	4	£33.43
635068	Impeller (Aquastream 125)	4	£33.43
635069	Impeller (Aquastream 150)	4	£33.43
635061	Diffuser	5	£16.11
635060	Diffuser gasket	6	£2.81
635059	Pump face H/L pot	7	£84.58
122243B	1½" Half barrel union c/w o ring	8	£3.79
122225B	50mm European metric Half union c/w o ring	8	£3.79
W02213	Union o ring	9	£2.53
635051	H/L pot lid	10	£24.02
635052	H/L pot lid o ring	11	£3.34
635054	H/L pot basket	12	£8.63
63402302	Drain plug	13	£1.49
63505321	Aquastream/Aquamite multi pack M8 bolts & washers	14	£5.96
	2 x 6350530 (M8 x 30 bolt)		
	4 x 6302180 (M8 washer)		
	2 X 6350540 (M8 x 40 bolt)		
6307245A	Motor with foot (Aquastream 50 - 125)	15	£252.76
635035E	Motor c/w slinger (Aquastream 150)	15	£305.98
85517	Clacker Valve (Drain down valve)	16	£3.93
635072	Pump foot (for 635035E)	19	£6.86
634086	Lid Toolbar (suits all pumps)	n/s	£5.72
63506351	Adaptor Kit:-		£68.98
	63506340 - Square Bracket Kit	1 &17	
	S1290816	17	
	6340165 - Flange Protector Kit	20	
	63400833 - Screw #4x3/8" pan Head SS (each, 2 required)	21	
	6340162 - Mechanical Seal SS 316	3	
6340451	Capacitors for Aquamite 033 & 050	n/s	£30.02
6340452	Fans for Aquamite 033 & 050	n/s	£5.12
6340444	Fan covers for Aquamite 033 & 050	n/s	£11.26
6340446	Capacitors for Aquamite 075, 100 & 125	n/s	£34.00
6340454	Fans for Aquamite 075, 100 & 125	n/s	£6.48
6340440	Fan covers for Aquamite 075, 100 & 125		£11.26

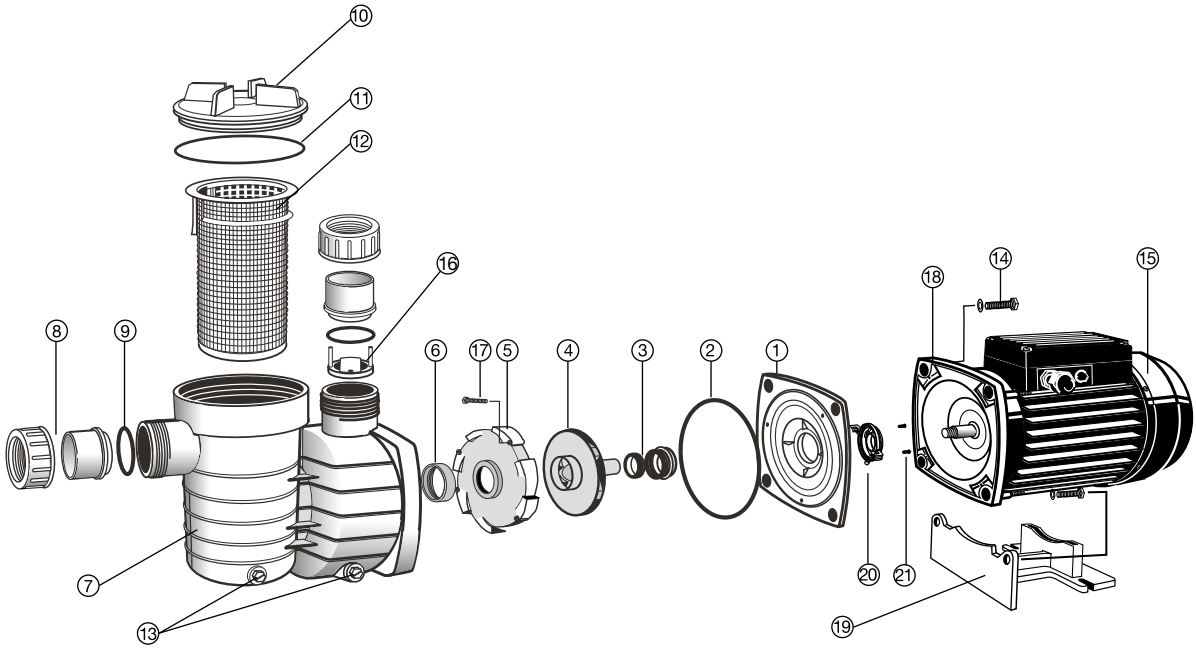

WATERCO
Water, the liquid of life

Supastream

Part Number	Product Description	Diagram No.	LIST PRICE
635029EM	Motor 0.37 kW single phase	1	£204.67
635030EM	Motor 0.55 kW single phase	1	£204.67
635034EM	Motor 0.75 kW single phase	1	£204.67
635035EM	Motor 1.10 kW single phase	1	£204.08
6350293EM	Motor 0.37 kW three phase	1	£204.67
6350303EM	Motor 0.55 kW three phase	1	£204.67
6350343EM	Motor 0.75 kW three phase	1	£218.31
6350353EM	Motor 1.10 kW three phase	1	£235.37
635072	Motor pump foot	2	£6.86
635074	Pump foot insert (Supastream 75, 100 & 125)	n/s	£1.63
635063	Adapter plate	4	£16.92
S1226911	Pump body o ring	5	£2.05
6340162	Mechanical seal (316 s/s)	6	£32.75
63401625	Mechanical seal (Silicon Carbide S/S Viton)	6	£83.22
635065	Impeller (Supastream 50)	7	£33.43
635096	Impeller (Supastream 75)	7	£33.43
635097	Impeller (Supastream 100)	7	£33.43
635098	Impeller (Supastream 125)	7	£33.43
635099	Impeller (Supastream 150)	7	£33.43
635061	Diffuser	8	£16.11
635060	Diffuser gasket	9	£2.81
635081	Pump face H/L pot body	10	£84.58
S096871	Drain plug	11	£1.49
122243B	1½” half union c/w o ring	12	£3.79
122245B	50mm European metric half union c/w o ring	12	£3.79
W02213	Half union o ring	13	£2.53
85517	Drain down valve	13	£3.12
635086	H/L pot basket	14	£9.90
635052	H/L pot lid o ring	15	£3.34
635051	H/L pot lid	16	£24.02
S1228633	Brass shim (set of 3)	n/s	£2.59
S1160963	Supastream M8 multi pack bolts & washers	17	£4.47
	2 x 6350530 (M8 x 30 bolt)		
	4 x 6302180 (M8 washer)		
	2 x 6350540 (M8 x 40 bolt)		
634086	Toolbar (suit all pumps)	n/s	£5.72
63506351	Adaptor kit		£68.98
	63506340 - Square Bracket Kit	4 & 19	
	S1290816 - Screw M3 x 30mm Pan Head SS (each, 4 required)	19	
	6340165 - Flange Protector Kit	20	
	63400833 - Screw#4x3/8” Pan Head SS (each, 2 required)	21	
	6340162 - Mechanical Seal SS 316	6	
634086	Lid Toolbar (suits all pumps)	n/s	£5.72
6340446	Capacitors for Supastream 075, 100 & 125	n/s	£34.00
6340454	Fans for Supastream 075, 100 & 125	n/s	£6.48
6340440	Fan covers for Supastream 075, 100 & 125	n/s	£11.261
6340447	Capacitors for Supastream 150, 200 & 250	n/s	£34.00
6340455	Fans for Supastream 150, 200 & 250	n/s	£6.48
6340443	Fan covers for Supastream 150, 200 & 250	n/s	£11.26

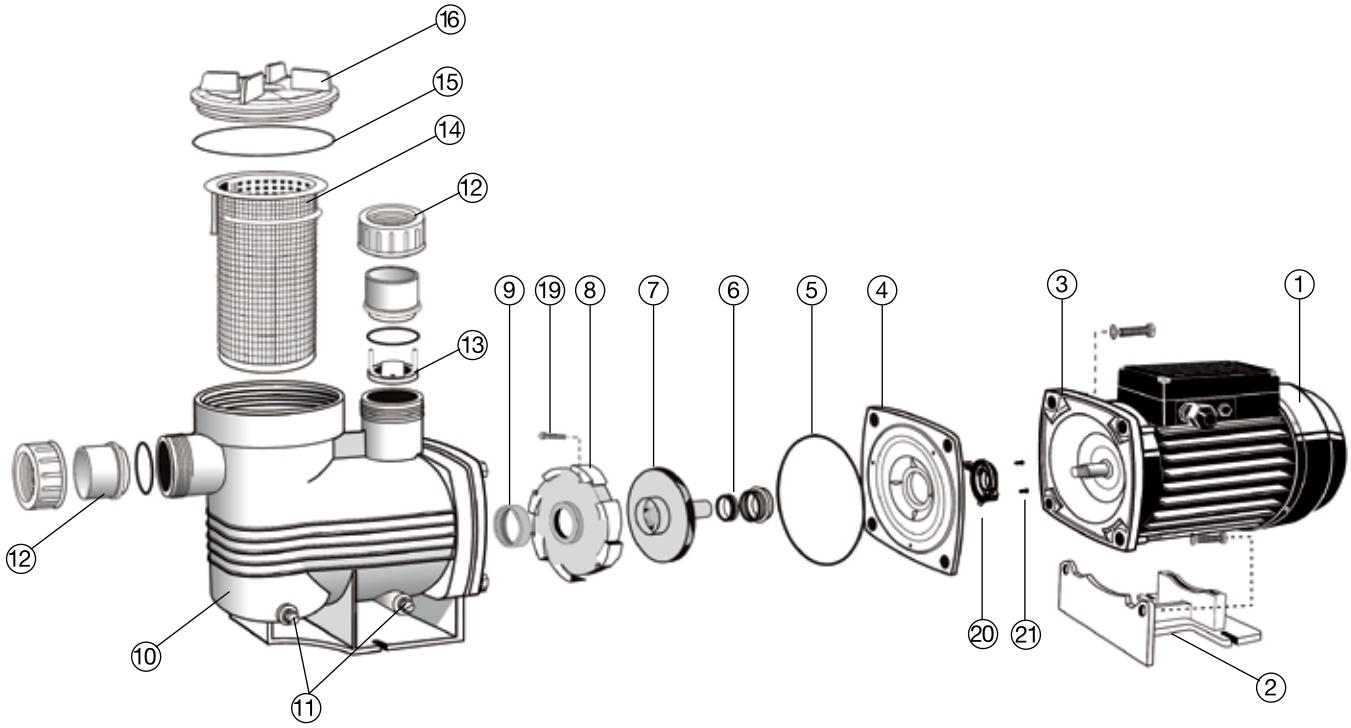

WATERCO
Water, the liquid of life

Supatuf

Part Number	Product Description	Diagram No.	LIST PRICE
634000	H/L pot lid	1	£26.10
63151	H/L pot lid o ring	2	£4.70
6350011	H/L pot basket mk2	3	£10.84
6350191	Pump face H/L pot body (Supatuf 75 - 200)	5	£73.31
63501912	Pump face H/L pot (Supatuf 250)	5	£73.31
635017	Diffuser (Supatuf 75 - 200)	7	£24.02
635022	Diffuser (Supatuf 250)	7	£24.02
634011	Diffuser gasket	8	£2.82
635015	Impeller (Supatuf 50)	9	£40.94
635010	Impeller (Supatuf 75)	9	£40.93
635011	Impeller (Supatuf 100)	9	£40.93
635014	Impeller (Supatuf 125)	9	£40.93
635012	Impeller (Supatuf 150)	9	£40.93
635013	Impeller (Supatuf 200)	9	£40.93
6350230	Impeller (Supatuf 250)	9	£40.93
6350160	Impeller (Supatuf 300) (suit screw type)	9	£40.93
6350180	Impeller (Supatuf 350) (suit screw type)	9	£40.93
63401625	Mechanical seal (Silicon Carbide S/S Viton)	10	£83.22
635028	Pump body o ring	11	£2.05
6340222	Pump foot (Supatuf 75 -125)	14	£9.21
6340223	Pump foot (Supatuf 150 - 250)	14	£9.21
634024BLK	2” Half union c/w o ring	15	£5.68
6340240	63mm European metric Half union c/w o ring	15	£5.68
W02280	Half union o ring	16	£0.85
635029EM	Motor 0.37 kW single phase	17	£204.08
635030EM	Motor 0.55 kW single phase	17	£204.08
635034EM	Motor 0.75 kW single phase	17	£218.31
635035EM	Motor 1.10 kW single phase	17	£235.37
635036EM	Motor 1.50 kW single phase	17	£276.30
635038EM	Motor 1.80 kW single phase	17	£313.82
6350293EM	Motor 0.37 kW three phase	17	£204.08
6350303EM	Motor 0.55 kW three phase	17	£204.08
6350343EM	Motor 0.75 kW three phase	17	£218.31
6350353EM	Motor 1.10 kW three phase	17	£235.37
6350363EM	Motor 1.50 kW three phase	17	£276.30
6350383EM	Motor 1.80 kW three phase	17	£313.82
634023	Drain Plug	18	£1.49
6340020	Supatuf M6 multi pack bolts & washers	n/s	£2.80
	2 x 6340060 (M6 nut)		
	2 x 6340030 (M6 washer)		
	2 x 63400410 (M6 x 25 bolt)		
63401813	Supatuf M10 multi pack bolts & washers (pre 2003)	n/s	£5.16
	4 x 6302181 (M10 washer)		
	4 x 6340181 (M10 x 30 bolt)		
63401812	Supatuf M8 multi pack bolts & washers(2003 current body)	n/s	£3.78
	4 x 6302180 (M8 washer)		
	4 x 6350530 (M8 x 30 bolt)		
634086	Lid Toolbar (suits all pumps)	n/s	£5.72
6350212	Adaptor kit for Supatuf/Supaflo (75 - 200)		£68.98
	63502140 -Square Bracket Kit (75 - 200)	6 & 13	
	S1290816 - Screw M3x30mm Pan Head SS (each, 3 required)	6	
	6340165 - Flange Protector Kit	20	
	63400833 - Screw # 4 x 3/8" Pan Head SS (each, 2 required)	21	
	6340162 - Mechanical Seal SS 316	10	
TBA	Adaptor kit for Supatuf/Supaflo (250 - 350)		£68.98
	63502141 -Square Bracket Kit (250-350)	6 & 13	
	63400835 - Screw M3x45 SS304 Pan Head SS (each, 3 required)	6	
	6340165 - Flange Protector Kit	20	
	63400833 - Screw # 4 x 3/8" Pan Head SS (each, 2 required)	21	
	6340162 - Mechanical Seal SS 316	10	
635021	Adapter plate	13	£16.91

6340162	Mechanical seal (316 s/s)	10	£32.75
63401625	Mechanical seal (Silicon Carbide S/S Viton)	10	£83.22
634086	Lid Toolbar (suits all pumps)	n/s	£5.72
6340451	Capacitors for Supatuf 050	n/s	£30.02
6340452	Fans for Supatuf & 050	n/s	£5.12
6340444	Fan covers for Supatuf 050	n/s	£11.26
6340446	Capacitors for Supatuf 075, 100 & 125	n/s	£34.00
6340454	Fans for Supatuf 075, 100 & 125	n/s	£6.48
6340440	Fan covers for Supatuf 075, 100 & 125	n/s	£11.26
6340447	Capacitors for Supatuf 150, 200 & 250	n/s	£34.00
6340455	Fans for Supatuf 150, 200 & 250	n/s	£6.48
6340443	Fan covers for Supatuf 150, 200 & 250	n/s	£11.26

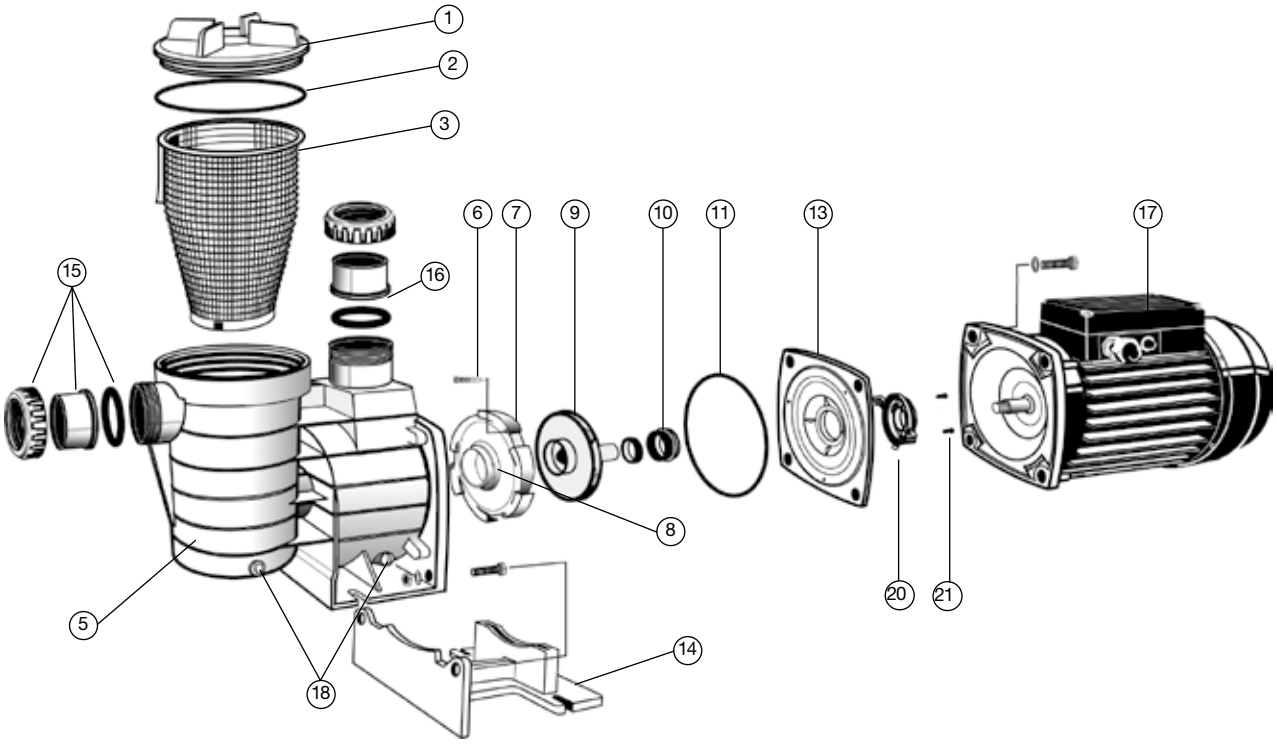

WATERCO
Water, the liquid of life

Hydrotuf

Part Number	Product Description	Diagram No.	LIST PRICE
6340274EM	Motor for Hydrotuf 100, 125	1	£228.38
6340275EM	Motor for Hydrotuf 150, 200	1	£263.51
6350216	Hydrotuf Bracket	2	£26.98
635028	Pump Body O ring	3	£2.05
6340162	Mechanical Seal	4	£32.75
63501103	Impeller 100	5	£38.29
63501403	Impeller 125	5	£38.29
63501203	Impeller 150	5	£38.29
63401340	Impeller 200	5	£38.29
634079	Suction Nozzle	6	£11.13
634024B	50mm Half Union C/W O ring	7	£9.07
634085	H/L Pot Basket	8	£13.58
61214	H/L Pot O ring	9	£5.39
634082	H/L Pot Lid	10	£10.64
61209	H/L Pot Lock Ring	11	£17.40
63402301	Drain Plug 1/4” NPT (2 required)	12	£1.56
634018371	M8 Multi Pack Bolts & Washers 316 S/S	14	£9.47
	10 x 6302180 M8 Washer (4 required)		
	10 x 63401830 M8 x 20 Bolt (4 required)		
634004211	M6 Multi Pack Bolts & Washers 316 S/S	15	£10.25
	2 x 6340030 M6 Washer (8 required)		
	2 x 6340040 M6 x 20 Bolt (8 required)		
	2 x 6340060 M6 Nut (2 required)		
6340223	Pump Foot	16	£9.21
634011	Diffuser Gasket	17	£2.82
63501915	Pump Face H/L Pot Body 50mm	18	£120.47
635017	Diffuser	19	£24.02
6340212	Pump Foot Insert (125, 150, 200)	26	£13.77
63402123	Pump Foot Insert (100)	26	£13.77

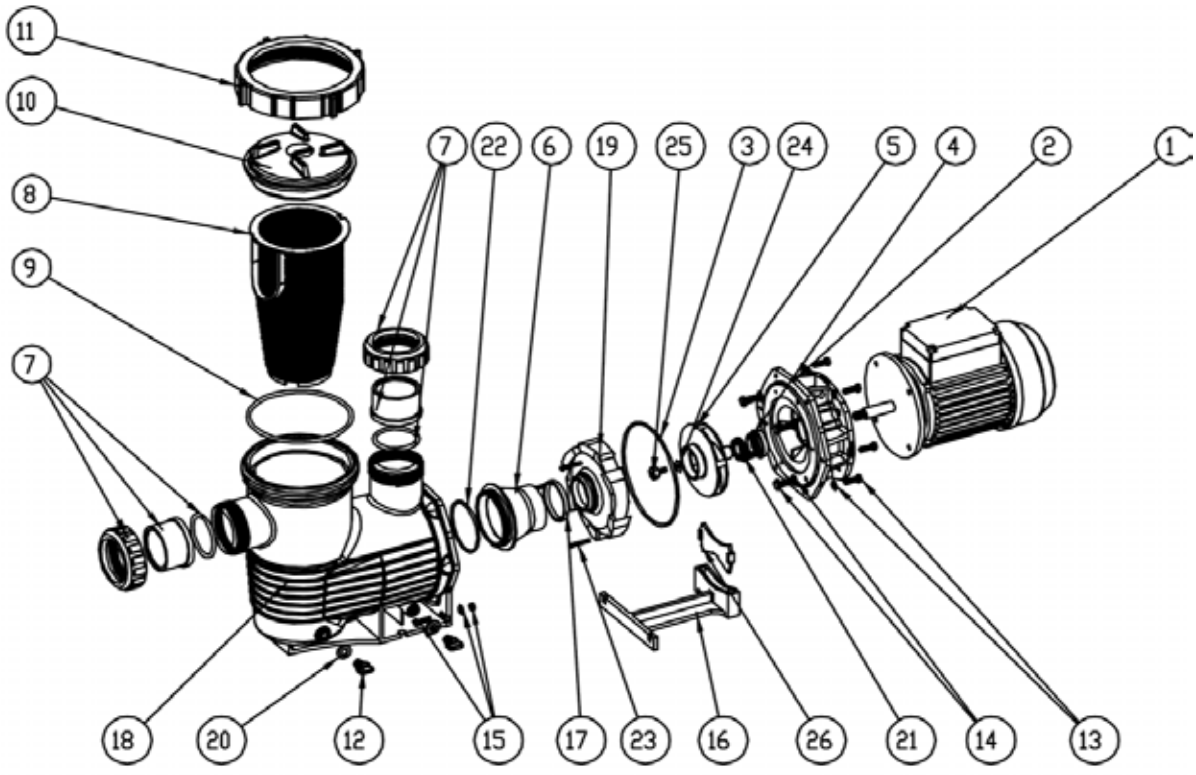

Hydrostorm

Part Number	Product Description	Diagram No.	LIST PRICE
6340274EM	Motor 0.75 kW single phase	1	£228.38
6340275EM	Motor 1.10 kW single phase	1	£263.51
6340277EM	Motor 1.50 kW single phase	1	£333.78
634030EM	Motor 2.20 kW single phase	1	£433.34
63402743EM	Motor 0.75 kW three phase	1	£228.38
63402753EM	Motor 1.10 kW three phase	1	£263.51
63402773EM	Motor 1.50 kW three phase	1	£298.65
6340303EM	Motor 2.20 kW three phase	1	£409.91
63402031	Mounting bracket/Adaptor Plate	2	£72.48
634017	Pump Body O ring	3	£4.84
6340162	Mechanical seal (316 S/S)	4	£32.74
63401625	Mechanical seal (Silicon Carbide S/S Viton)	4	£83.22
634012	Impeller (Hydrostorm 75) pre 98 also 1.00E post 1998	5	£36.85
634013	Impeller (Hydrostorm 100) pre 1998	5	£36.85
6340143	Impeller (Hydrostorm 150) post 1998	5	£36.85
634014	Impeller (Hydrostorm 150) pre 1998 also 200E post 1998	5	£36.85
6340145	Impeller (Hydrostorm 200) suit retaining screw type	5	£36.85
6340151	Impeller (Hydrostorm 200) pre 1998 also 250E post 1998	5	£36.85
6340157	Impeller (Hydrostorm 250) suit retaining screw type	5	£36.85
63401534	Impeller (Hydrostorm 300) suit retaining screw type	5	£36.85
63401533	Impeller (Hydrostorm 350) suit retaining screw type	5	£36.85
634041	Impeller retaining screw	n/s	£7.45
644772	Fibre washer	n/s	£0.19
634010	Diffuser (Hydrostorm 75, 100, 150, 200, 250)	6	£26.71
6340103	Diffuser (Hydrostorm 300, 350)	6	£26.71
63400824	Diffuser screw (set of 4)	7	£1.96
634011	Diffuser gasket	8	£2.91
6340113	Diffuser O ring 3.50hp	8	£2.91
634022	Pump foot	9	£10.24
63402122	Pump foot insert (Hydrostorm 100-250)	n/s	£5.80
634021	Pump foot insert (Hydrostorm 300-350 & all 3 phase)	n/s	£5.81
6340051	H/L pot body & pump face	10	£105.59
6340053	H/L pot body & pump face (Hydrostorm 300, 350)	10	£105.59
W02280	2" Half union O ring	11	£0.87
634024BLK	2” Half union c/w o ring	12	£5.86
63402400	63mm European metric Half union c/w o ring	12	£5.86
122257	2” x 1½” Half union (suit 1.00, 1.25hp 2002)	12	£6.40
634001	H/L pot basket	13	£11.17
63151	H/L pot lid O ring	14	£4.84
634000	H/L pot lid	15	£26.89
634043	Basket flapper	n/s	£1.96
634023	H/L pot drain plug	n/s	£1.53
634046	End Shield	n/s	£31.62
6340470	Large square end shield (71 frame)	n/s	£55.86
634004211	Hydrostorm M6 multi pack bolts & washers (316 S/S)	n/s	£10.25
	2 x 6340040 (M6 x 20 bolt)		
	2 x 6340030 (M6 washer)		
	2 x 6340060 (M6 nut)		
634018371	Hydrostorm M8 multi pack bolts & washers (316 S/S)	n/s	£9.47
	6 x 63401830 (M8 x 20 bolt)		
	6 x 6302180 (M8 washer)		
634086	Lid Toolbar (suits all pumps)	n/s	£5.72
6340446	Capacitors for Hydrostorm 075, 100 & 125	n/s	£34.00
6340454	Fans for Hydrostorm 075, 100 & 125	n/s	£6.48
6340440	Fan covers for Hydrostorm 075, 100 & 125	n/s	£11.26
6340447	Capacitors for Hydrostorm 150, 200 & 250	n/s	£34.00
6340455	Fans for Hydrostorm 150, 200 & 250	n/s	£6.48
6340443	Fan covers for Hydrostorm 150, 200 & 250	n/s	£11.26

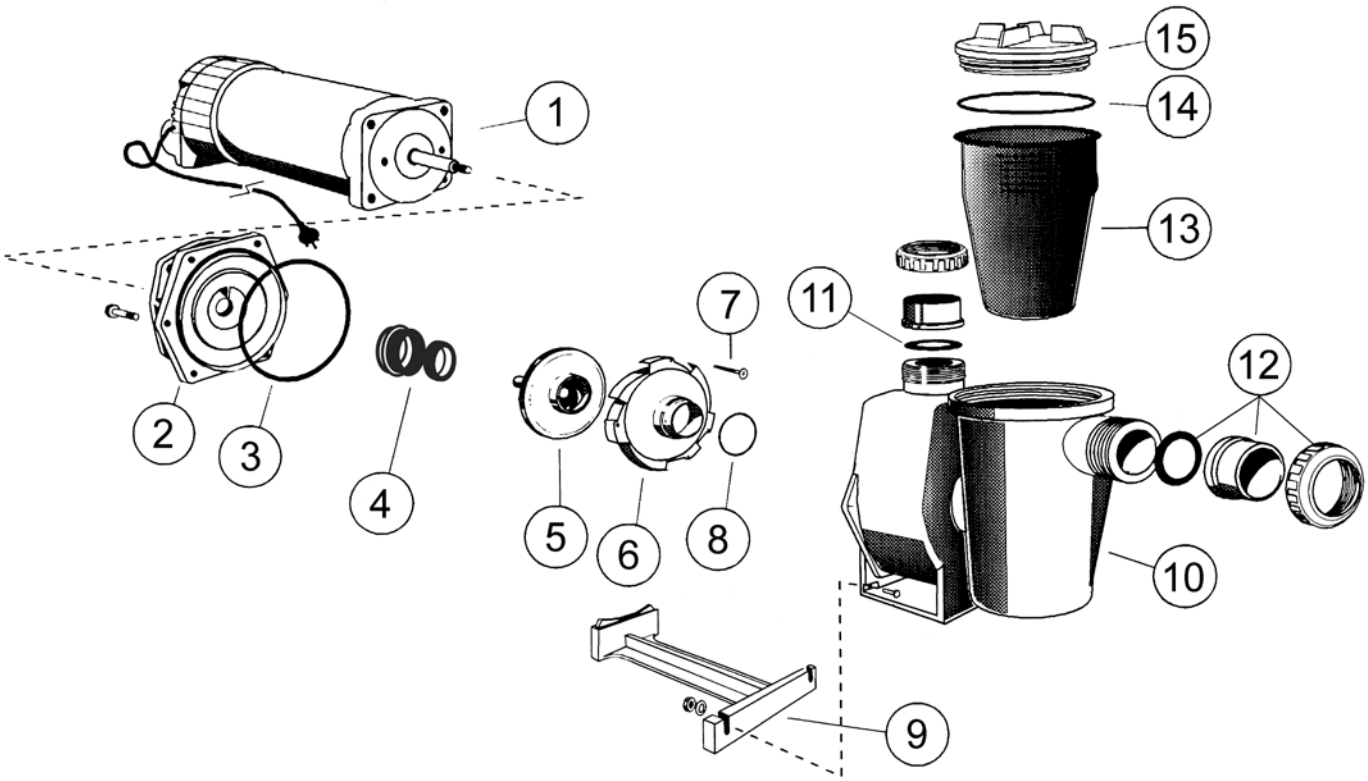
1
2
3
4
5
6
7
8
9
10
11
12
13
14
15

Part Number	Product Description	Diagram No.	LIST PRICE
6340274EM	Motor 0.75 kW single phase	1	£221.73
6340275EM	Motor 1.10 kW single phase	1	£255.83
6340277EM	Motor 1.50 kW single phase	1	£324.01
634030EM	Motor 2.20 kW single phase	1	£420.71
63402743EM	Motor 0.75 kW three phase	1	£221.73
63402753EM	Motor 1.10 kW three phase	1	£255.83
63402773EM	Motor 1.50 kW three phase	1	£289.95
6340303EM	Motor 2.20 kW three phase	1	£397.98
6340681	Bracket assembly	2	£112.64
634070	Pump body o ring	3	£19.45
6340162	Mechanical seal (316 S/S)	4	£32.75
63401625	Mechanical seal (Silicon Carbide S/S Viton)	4	£83.22
634012	Impeller (Hydrostrom Plus 100)	5	£36.85
634013	Impeller (Hydrostorm Plus 125)	5	£36.85
6340143	Impeller (Hydrostrom Plus 150)	5	£36.85
6340145	Impeller (Hydrostorm Plus 200)	5	£36.85
6340157	Impeller (Hydrostorm Plus 250)	5	£36.85
63401534	Impeller (Hydrostorm Plus 300)	5	£36.85
63401533	Impeller (Hydrostorm Plus 350)	5	£36.85
634015350	Impeller with flats (Hydrostorm Plus 400)	5	£47.32
634079	Suction nozzle (100 - 250)	6	£10.13
634081	Suction nozzle (300 - 400)	6	£10.13
634024BLK	2” half union c/w o ring	7	£5.68
63402400	63mm European metric Half union c/w o ring	7	£5.68
W02280	2" Half union O ring	7	£0.85
63406550BLK	2½” / 2” Half union (suit 6340783)	7	£16.45
6340655EBK	2½” / 2” Half union c/w 63 mm metric tail piece	7	£16.45
63406565EBLK	2½" Half Union c/w 75mm metric tail piece c/w o ring	7	£16.45
644490	2½” / 3” Half union Plain End Only (suit 6340783)	7	£4.41
12780	Coupling 3"	n/s	£7.87
634085	H/L pot basket	8	£13.58
62124	H/L pot o ring	9	£5.39
634082	H/L pot lid	10	£10.64
61209	H/L pot lock ring	11	£17.40
634023	Drain plug	12	£1.49
S0808921	Drain plug washer	13	£0.83
634004211	Hydrostorm M6 multi pack bolts & washers (316 S/S)	14	£10.25
	2 x 6340040 (M6 x 20 bolt)		
	2 x 6340030 (M6 washer)		
	2 x 6340060 (M6 nut)		
634018371	Hydrostorm M8 multi pack bolts & washers (316 S/S)	15	£9.47
	10 x 63401830 (M8 x 20 bolt)		
	10 x 6302180 (M8 washer)		
634021	Pump foot insert (100 - 350)	16	£5.64
634073	Pump foot insert (400 only)	16	£6.68
634022	Pump foot (100 - 350)	17	£9.94
634072	Pump foot (400 only)	17	£41.96
634011	Diffuser gasket (100 - 250)	18	£3.75
6340113	Diffuser gasket (300 - 400)	18	£2.83
6340761	Pump face H/L pot body 50mm (Hydrostorm Plus 100 - 250)	19	£276.68
6340783	Pump face H/L pot body 65mm (Hydrostorm Plus 300, 350)	19	£276.68
634010	Diffuser (Hydrostorm Plus 100 - 250)	20	£34.39
6340103	Diffuser (Hydrostorm Plus 300, 400)	20	£25.93
6340113	Suction nozzle O ring	21	£3.75
63400824	Diffuser screw (set of 4) (100 - 250)	22	£1.91
63400834	Diffuser screw (set of 4) (300 - 400)	22	£2.50
644772	Fibre washer (100 - 350)	23	£0.18
6340412	O ring BS113 (400 only)	23	£0.18
634041	Impeller retaining screw	24	£7.23
6340411	Nut M10 Overmoulded	24	£7.87
631782	Motor slinger - suits 634030E, 6340303E, 63404031E	26	£3.16

Hydrostorm Plus

634086	Lid Toolbar (suits all pumps)	n/s	£5.72
6340446	Capacitors for Hydrostorm Plus 100 & 125	n/s	£34.00
6340454	Fans for Hydrostorm Plus 100 & 125	n/s	£6.48
6340440	Fan covers for Hydrostorm Plus 100 & 125	n/s	£11.26
6340447	Capacitors for Hydrostorm Plus 150, 200 & 250	n/s	£34.00
6340455	Fans for Hydrostorm Plus 150, 200 & 250	n/s	£6.48
6340443	Fan covers for Hydrostorm Plus 150, 200 & 250	n/s	£11.26
6340448	Capacitors for Hydrostorm Plus 300 & 350	n/s	£34.00
6340441	Fan covers for Hydrostorm Plus 300 & 350	n/s	£11.26

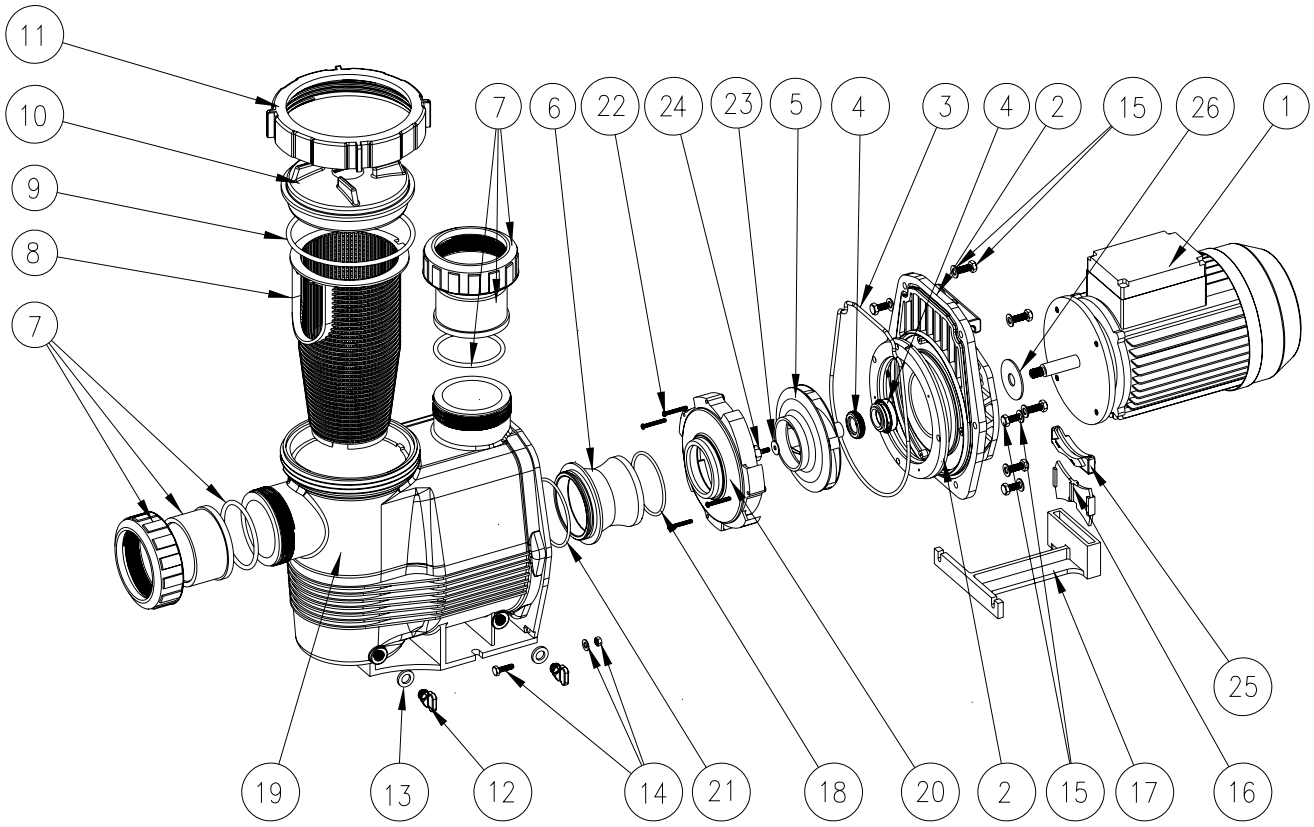

Part Number	Product Description	Diagram No.	LIST PRICE
634030EM	Motor 2.20 kW single phase c/w slinger	1	£432.08
6340303EM	Motor 2.20 kW three phase c/w slinger	1	£432.08
6340681	Bracket assembly	2	£112.64
634070	Pump body o ring	3	£19.45
6340162	Mechanical seal (316 S/S)	4	£32.75
63401625	Mechanical seal (Silicon Carbide S/S Viton)	3	£83.22
63401533	Impeller (Hydrostar 350)	5	£36.85
63402531	Suction nozzle 350	6	£7.60
63406550BLK	2½" / 2" Half union	7	£16.45
63406550E	2½" / 2" Half union c/w 63 mm European metric tail piece	7	£16.45
63406565EBLK	2½" Half Union c/w 75mm metric tail piece c/w o ring	7	£16.45
W02280	2" Half union O ring	7	£0.85
634063	H/L pot basket	8	£23.96
634075	H/L pot lid o ring	9	£9.48
6340661	Quarter turn lid and lock ring	10	£66.28
634023	Drain plug	11	£1.49
S0808921	Drain plug washer	12	£0.83
634004211	Hydrostorm M6 multi pack bolts & washers (316 S/S)	13	£10.25
	2 x 6340040 (M6 x 20 bolt)		
	2 x 6340030 (M6 washer)		
	2 x 6340060 (M6 nut)		
634018371	Hydrostorm M8 multi pack bolts & washers (316 S/S)	14	£9.47
	10 x 63401830 (M8 x 20 bolt)		
	10 x 6302180 (M8 washer)		
634021	Pump foot insert	15	£5.64
634022	Pump foot	16	£9.95
6340113	Diffuser gasket (suits 300- 350)	17	£2.82
6340493	Pump face H/L pot body (Hydrostar 300 - 350)	18	£311.90
6340103	Diffuser (Hydrostar 300 - 350)	19	£25.93
6340113	Suction nozzle O ring	20	£3.75
63400824	Diffuser screw (set of 4)	21	£1.90
644772	Fibre washer	22	£0.18
634041	Impeller retaining screw	23	£7.23
631782	Motor slinger - suits 634030E, 6340303E	24	£3.16

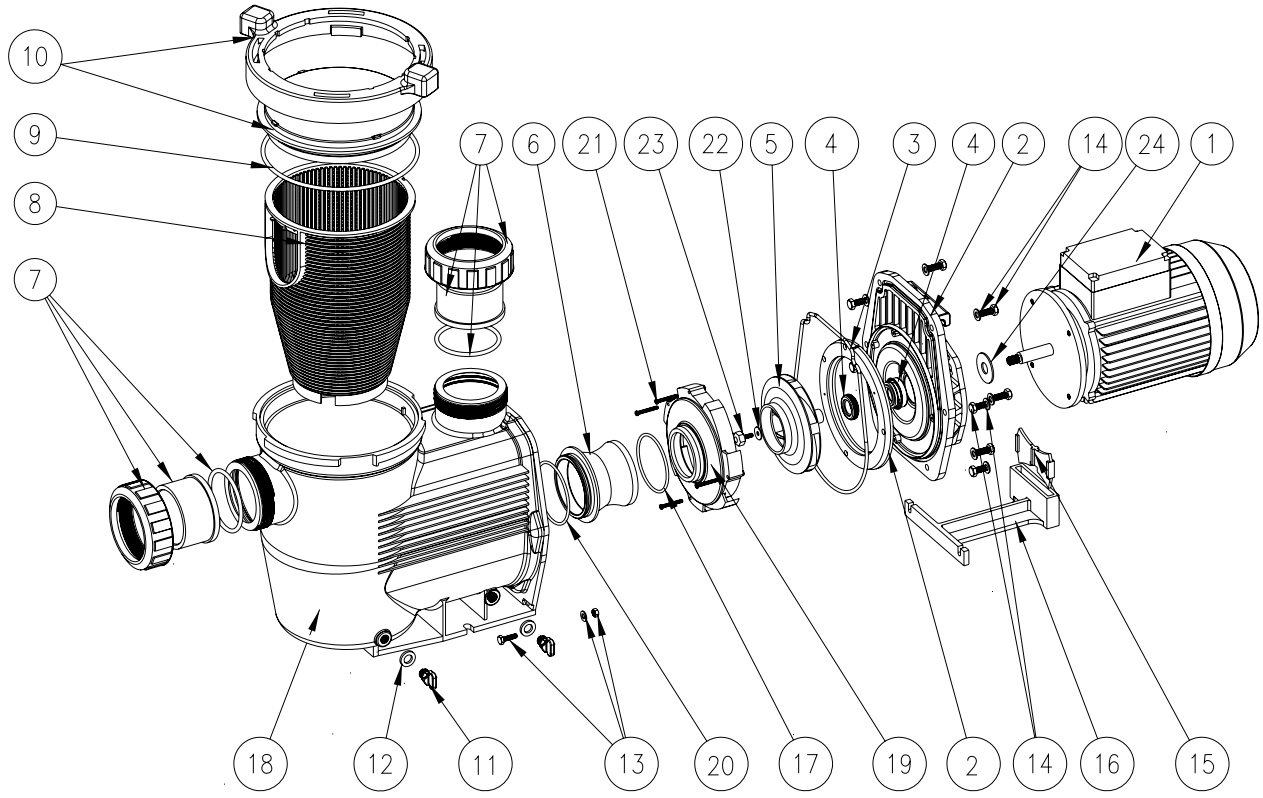

WATERCO
Water, the liquid of life

Hydrostar Commercial MK2 (Mk1 - Pre 03/2004)

Part Number	Product Description	Diagram No.	LIST PRICE
6340403EM	Motor 3.2 kW three phase c/w slinger (Hydrostar 400, 500)	1	£676.55
63405531EM	Motor three phase with keyshaft (Hydrostar 600 Mk2)	1	£812.99
634070031EM	Motor 4.0 kW three phase with keyshaft (Hydrostar 700 Mk2)	1	£869.85
634059	Motor rotation indicator	n/s	£57.40
6340681	Bracket assembly	2	£112.64
634070	Pump body o ring	3	£19.45
6340162	Mechanical seal (316 S/S)	4	£32.75
63401625	Mechanical seal (Silicon Carbide S/S Viton)	4	£83.22
634055	Impeller (Hydrostar 400)	5	£43.66
634056	Impeller (Hydrostar 500)	5	£43.66
634057	Impeller (Hydrostar 600)	5	£43.66
634058	Impeller (Hydrostar 700)	5	£43.66
6340550	Impeller (Hydrostar 400 MK2) to suit keyshaft c/w mating ring	5	£43.66
6340560	Impeller (Hydrostar 500 Mk2) to suit keyshaft c/w mating ring	5	£43.66
6340570	Impeller (Hydrostar 600 Mk2) to suit keyshaft c/w mating ring	5	£43.66
6340580	Impeller (Hydrostar 700 Mk2) to suit keyshaft c/w mating ring	5	£43.66
634061	Diffuser (pre 10/02)	n/s	£34.33
6340113	Diffuser gasket (pre 10/02)	n/s	£3.75
63400854	Diffuser screw (set of 4)	n/s	£2.50
634064	Suction nozzle (for use with diffuser)	6	£14.91
634087	Suction nozzle (for use w/o diffuser)	6	£12.90
6340803	3” Half union c/w O ring	7	£17.05
634080E	90mm European metric Half union c/w O ring	7	£17.05
6302550	3" half union O ring	7	£5.54
634063	H/L pot basket	8	£23.96
634075	H/L pot lid o ring	9	£9.48
6340651	H/L pot quarter turn lid and lock ring	10	£112.41
634023	Drain plug	11	£1.49
S0808921	Drain plug washer	12	£0.83
634004211	Hydrostorm M6 multi pack bolts & washers (316 S/S)	13	£10.25
	2 x 6340040 (M6 x 20 bolt)		
	2 x 6340030 (M6 washer)		
	2 x 6340060 (M6 nut)		
634018371	Hydrostorm M8 multi pack bolts & washers (316 S/S)	14	£9.47
	10 x 63401830 (M8 x 20 bolt)		
	10 x 6302180 (M8 washer)		
634073	Pump foot insert (Hydrostar 400 - 600)	15/17	£5.64
6340741	Pump foot insert (Hydrostar 700)	15/17	£5.64
634072	Pump foot (all models)	16	£31.63
6340511	Pump face H/L pot body - includes 634064 (for models with diffuser)	18	£335.27
6340512	Pump body assembly - includes 634087 (for models w/o diffuser)	18	£308.14
6340411	Nut M10 overmoulded (for MK2 motors)	19	£7.87
6340412	O ring (for MK2 motors)	19	£0.18
644772	Fibre washer (Hydrostar MK1)	n/s	£0.18
634041	Impeller retaining screw	n/s	£7.23
6340113	Suction nozzle O ring	20	£3.75
631782	Motor slinger	21	£3.16

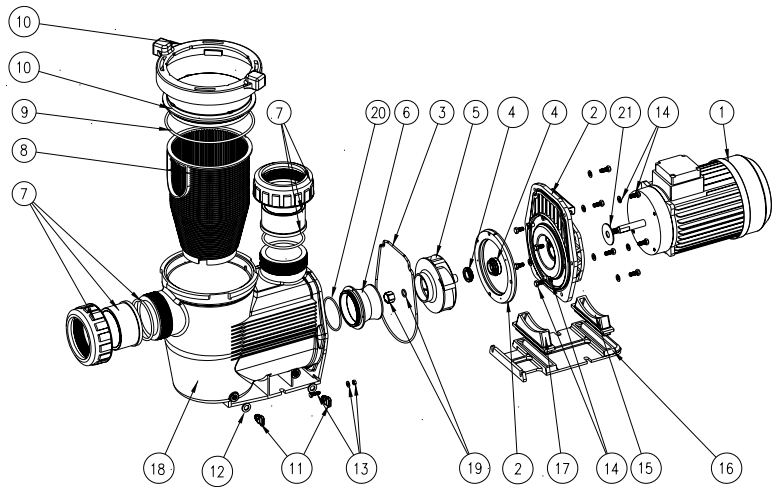

Hydrostar Commercial MK3 (Post 08/2006)

Part Number	Product Description	Diagram No.	LIST PRICE
6340403EM	Motor 3.2 kW three phase c/w slinger (Hydrostar 400, 500)	1 & 2	£676.55
63405531EM	Motor three phase c/w slinger (Hydrostar 600)	1 & 2	£812.99
634070031EM	Motor 4.0 kW three phase c/w slinger (Hydrostar 700)	1 & 2	£869.85
631782	Motor Slinger 52 x 16 x 2	2	£3.16
6340682	Hydrostar Bracket Mk2	3	£128.86
6340700	Bracket O ring Mk2	4	£11.03
6340162	Mechanical seal (316 S/S)	5	£32.75
63401625	Mechanical seal (Silicon Carbide S/S Viton)	3	£83.22
6340550	Impeller (Hydrostar 400 MK2) to suit keyshaft c/w mating ring	6	£43.66
6340560	Impeller (Hydrostar 500 Mk2) to suit keyshaft c/w mating ring	6	£43.66
6340570	Impeller (Hydrostar 600 Mk2) to suit keyshaft c/w mating ring	6	£43.66
6340580	Impeller (Hydrostar 700 Mk2) to suit keyshaft c/w mating ring	6	£43.66
6340543	Hydrostar Volute Nozzle	7	£4.95
6340803	3” Half union c/w O ring	8	£17.05
634080E	90mm European metric Half union c/w O ring	8	£17.05
6302550	3" half union O ring	8	£5.54
634063	H/L pot basket	9	£23.96
634075	H/L pot lid o ring	10	£9.48
6340651	H/L pot quarter turn lid and lock ring	11	£112.41
63402301	Drain plug ¼" NPT (2 required)	12	£1.49
620193	O ring BS112	13	£1.91
634004211	M6 multi pack S/S 316 (Pack of 2)	14	£10.25
	2 x 6340040 (Screw M6 x 20 HEX SET SS316)		
	2 x 6340030 (Washer SS316 ¼" x 9/16" x 18G)		
	2 x 6340060 (Nut M6 HEX SS316)		
634018371	M8 multi pack S/S 316 (Pack of 6)	15	£9.47
	14 x 63401830 (Screw Hex Set M8 x 20 S/S316)		
	14 x 6302180 (Washer S/S 316 5/16" x 5/8" x 18G)		
634073	Pump foot insert (Hydrostar 400 - 600)	16/18	£5.64
6340741	Pump foot insert (Hydrostar 700)	16/18	£5.64
634072	Pump foot (all models)	17	£31.63
6340514	Hydrostar Body 3" Port Mk2	19	
6340411	Nut M10 overmoulded (for MK2 motors)	20	£7.87
6340412	O ring (BS113)	20	£0.18
6340116	O ring (BS151)	21	£2.98
6340540	Volute Front	22	£38.56
6340541	Volute Rear	23	£34.27
6340542	Volute insert (400, 500)	24	£5.96
6340825	Screw M4 x 40mm P/Head SS304 (4 required)	25	£0.77
6340828	Screw 8G x 5/8" Countersunk SS304 (5 required)	26	£0.77
63400833	Screw # 4 x 3/8" P/Head SS304 (2 required)	27	£0.20
6340115	O ring (BS145)	28	£2.74
6340826	Nut M4 Nyloc Hex SS304 (4 required)	29	£0.77
6340827	Screw 8G x 13mm Countersunk SS304 (3 required)	30	£0.77
636059	Motor rotation indicator	n/s	£57.40

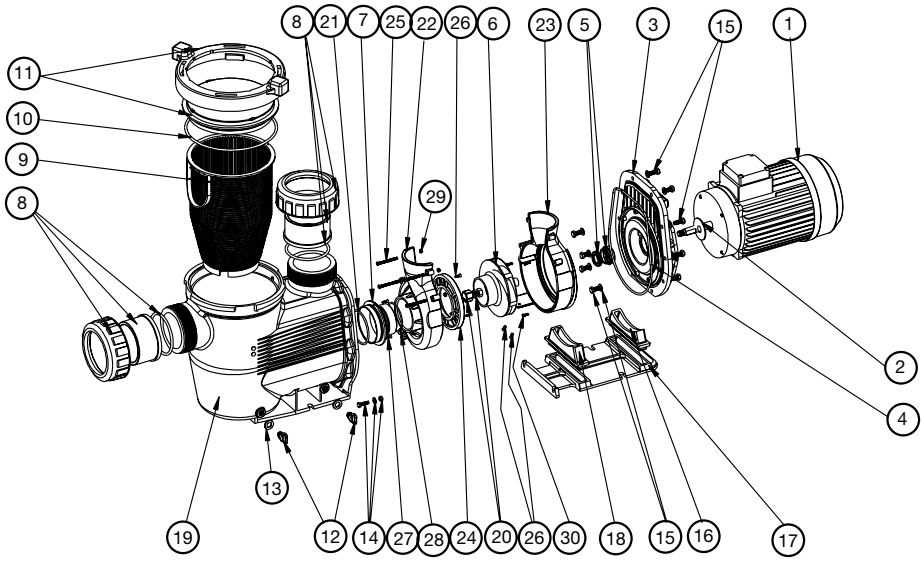

WATERCO
Water, the liquid of life

Stainless Steel Pump

Part Number	Product Description	Diagram No.	LIST PRICE
6340803	3" Half Union c/w O ring	1	£24.85
6302550	3" Half Union O ring	1	£5.54
6340651	Lid & Lock Ring	2	£112.41
634075	H/L pot lid o ring	3	£9.48
634063	H/L pot basket	4	£23.96
6340901	Lint Pot S/S (to suit 4 kW)	5	£95.42
6340902	Lint Pot S/S (to suit 5.5 kW)	5	£101.32
634023	Drain Plug H/L Pot	6	£1.49
S0808921	Washer Drain plug H/L Pot	7	£0.83
1216801	Flange Gasket	8	£6.44
6340904	Casing (to suit 4 kW - Screw Type)	9	£2,223.67
6340906	Casing (to suit 4 kW - Flange Type)	9	£2,223.67
6340905	Casing (to suit 5.5 kW - Screw Type)	9	£2,404.97
6340907	Casing (to suit 5.5 kW - Flange Type)	9	£2,404.97
6340935	Casing Gasket	10	£23.66
6340915	Impeller Nut	11	£86.72
6340916	Spring Washer M16 SS	12	£7.87
6340910	Impeller (to suit 4 kW)	13	£1,111.80
6340911	Impeller (to suit 5.5 kW)	13	£1,135.47
6340917	Impeller Key	14	£31.53
6340925	Spacer (to suit 4 kW)	15	£78.85
6340926	Spacer (to suit 5.5 kW)	15	£78.85
63401627	Mechanical Seal (to suit 4 kW)	16	£57.57
63401628	Mechanical Seal (to suit 5.5 kW)	16	£94.65
6340933	Seal Plate (to suit 4 kW)	17	£1,206.45
6340934	Seal Plate (to suit 5.5 kW)	17	£1,293.17
6340930	Adaptor Plate (to suit 4 kW)	18	£331.20
6340931	Adaptor Plate (to suit 5.5kW)	18	£292.76
63404020	Motor 4 kW	19	£1,182.79
63404021	Motor 5.5 kW	19	£1,557.32
6340921	Motor Support 4 kW (4 required)	20	£4.71
6340922	Motor Support 5.5 kW (4 required)	20	£5.42
631784	Motor Slinger (to suit 4 kW)	n/s	£8.28
631785	Motor Slinger (to suit 5.5 kW)	n/s	£8.28
6340924	Hex Bolts M10 x55mm (4 required)	n/s	£2.26
6302181	Washer M10 - SS (4 required)	n/s	£2.44
S059676	Nut M10 - SS 304 (8 required)	n/s	£2.56
6340920	Bolts M12 x 25mm SS 304 (8 required)	n/s	£5.90
6340936	Plain Washer M12 SS (4 required)	n/s	£0.48
6340923	Stud M10 x 20mm SS 304 (4 required)	n/s	£7.87
6340918	Casing Drain Plug 3/8"	n/s	£14.60
6340919	Plug ¼" NPT SS 304	n/s	£14.60
6340938	Hex Bolts M16 x 60mm (8 required)	n/s	£6.62
6340939	Hex Nut M16 SS 304 (8 required)	n/s	£1.49
6340937	Plain Washer M16 SS (8 required)	n/s	£0.83

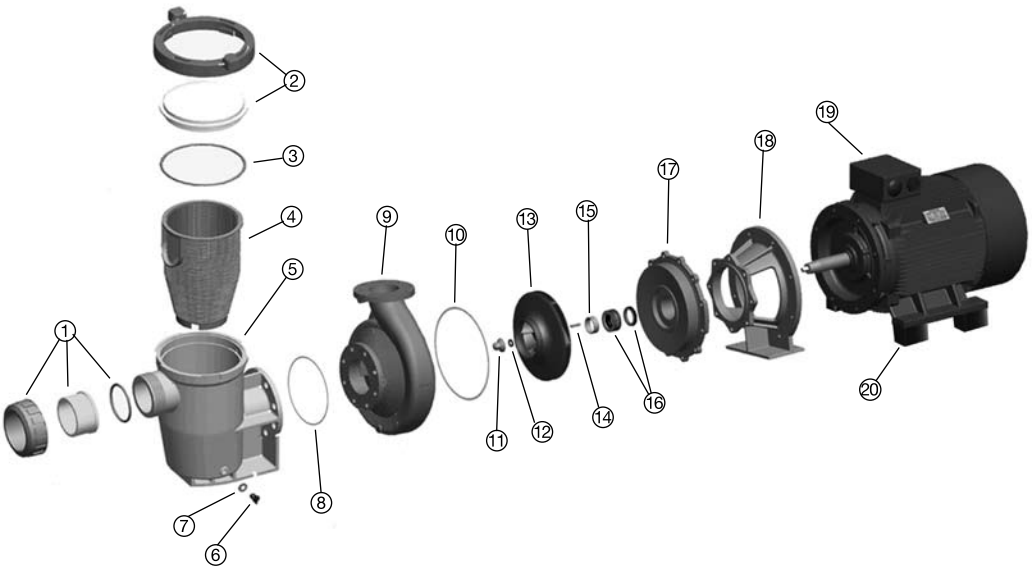

Part Number	Product Description	Diagram No.	LIST PRICE
634040202	Motor 4.0kW MEPS2	1	£1,694.34
634040212	Motor 5.5kW MEPS2	1	£2,233.29
634040222	Motor 7.5kW MEPS2	1	£2,476.73
634040232	Motor 11.0kW MEPS2	1	£2,476.73
631786	Motor Slinger (4.0, 5.5, 7.5)	2	£6.97
631787	Motor Slinger (11kW)	2	£10.83
6345039	Pump Bracket 4.0kW	3	£303.05
6345040	Pump Bracket 5.5-7.5kW	3	£303.05
6345041	Pump Bracket 11.0kW	3	£303.34
6345036	Nut 1/2”UNC Hex SS	4	£1.39
6345038	Spring Washer 1/2” SS	5	£0.88
6345037	Bolt 1/2”UNCx1.25” SS	6	£3.49
6345034	Stud 1/2”UNCx1.5”	7	£6.02
6345032	Seal Assembly 1.250” (4.0, 5.5, 7.5kW)	8	£99.67
6345033	Seal Assembly 1.750” (11.0kW)	8	£169.44
6345025	Pump Body Gasket	9	£8.64
6345028	Shaft Sleeve 1.25” OD (4.0, 5.5, 7.5kW)	10	£82.87
6345029	Shaft Sleeve 1.75” OD (11.0kW)	10	£88.04
6345030	External Circlip 1.187” SS (4.0, 5.5, 7.5kW)	11	£20.06
6345031	External Circlip 1.75” SS (11.0kW)	11	£31.39
6345026	Sleeve Gasket 1.25” (4.0, 5.5, 7.5kW)	12	£4.27
6345027	Sleeve Gasket 1.75” (11.0kW)	12	£4.27
63450210	Impeller 154.7mm - 4.0kW MEPS 2	13	£350.50
63450220	Impeller 154.7mm - 5.5kW MEPS 2	13	£350.50
63450230	Impeller 147mm - 7.5kW MEPS 2	13	£350.50
63450241	Impeller 154.7mm - 11.0kW MEPS 2	13	£350.50
6345017	Washer Gasket 1.19” (4.0, 5.5, 7.5kW)	14	£4.27
6345018	Washer Gasket 1.625” (11.0kW)	14	£4.27
6345019	Impeller Washer 1.1875” SS (4.0, 5.5, 7.5kW)	15	£20.67
6345020	Impeller Washer 1.625” SS (11.0kW)	15	£24.86
6345015	Washer - Stat-O-Seal SS 3/8” (4.0, 5.5, 7.5kW)	16	£8.72
6345016	Washer - Stat-O-Seal SS 1/2” (11.0kW)	16	£12.21
6345062	Bolt 3/8”UNCx1” SS (4.0, 5.5, 7.5kW)	17	£2.35
6345063	Bolt 1/2”UNCx1” SS (11.0kW)	17	£4.18
6345013	Bronze Wear Ring	18	£104.65
6345011	Plug 1/4”	19	£8.29
6345012	Plug 1/2”	20	£13.96
63450100	Pump Housing Assembly	21	£1,308.13
6345010	Pump Housing - Cast Iron	21	£1,190.40
6340964	Wet End 4.0kW	n/s	£1,787.37
6340965	Wet End 5.5kW	n/s	£2,323.57
6340967	Wet End 7.5kW	n/s	£3,020.64
6340969	Wet End 11.0kW	n/s	£3,926.83
6345008	Strainer 6”	n/s	£1,526.15
6345057	Strainer Housing - Cast Iron	n/s	£1,133.72
6345050	Strainer Lid - Cast Iron	n/s	£279.07
6345051	Strainer Lid O ring	n/s	£39.24
6345052	Strainer Basket	n/s	£392.44
6345053	Hold Down Knob	n/s	£55.81
6345054	Strainer Knob Bolt	n/s	£29.65
6345056	Knob Roll Pin	n/s	£13.96
6345035	Spring Washer 3/8” SS	n/s	£0.70
63453063	Flange Gasket 4” ANSI	n/s	£23.09
63453064	Flange Gasket 6” ANSI	n/s	£35.30
63409204	Bolt 3/4”UNCx2.25”	n/s	£5.93
63409205	Spring Washer 3/4”	n/s	£0.70
63409207	Bolt 5/8”UNCx2” Galvanised	n/s	£5.67
63409208	Spring Washer 5/8”	n/s	£0.48
6345065	Key Steel 3/16”x3/16” - Zinc Plated (4.0, 5.5, 7.5kW)	n/s	£21.59
6345066	Key Steel 1/4”x1/4” - Zinc Plated (11.0kW)	n/s	£28.07

Cast Iron Pump

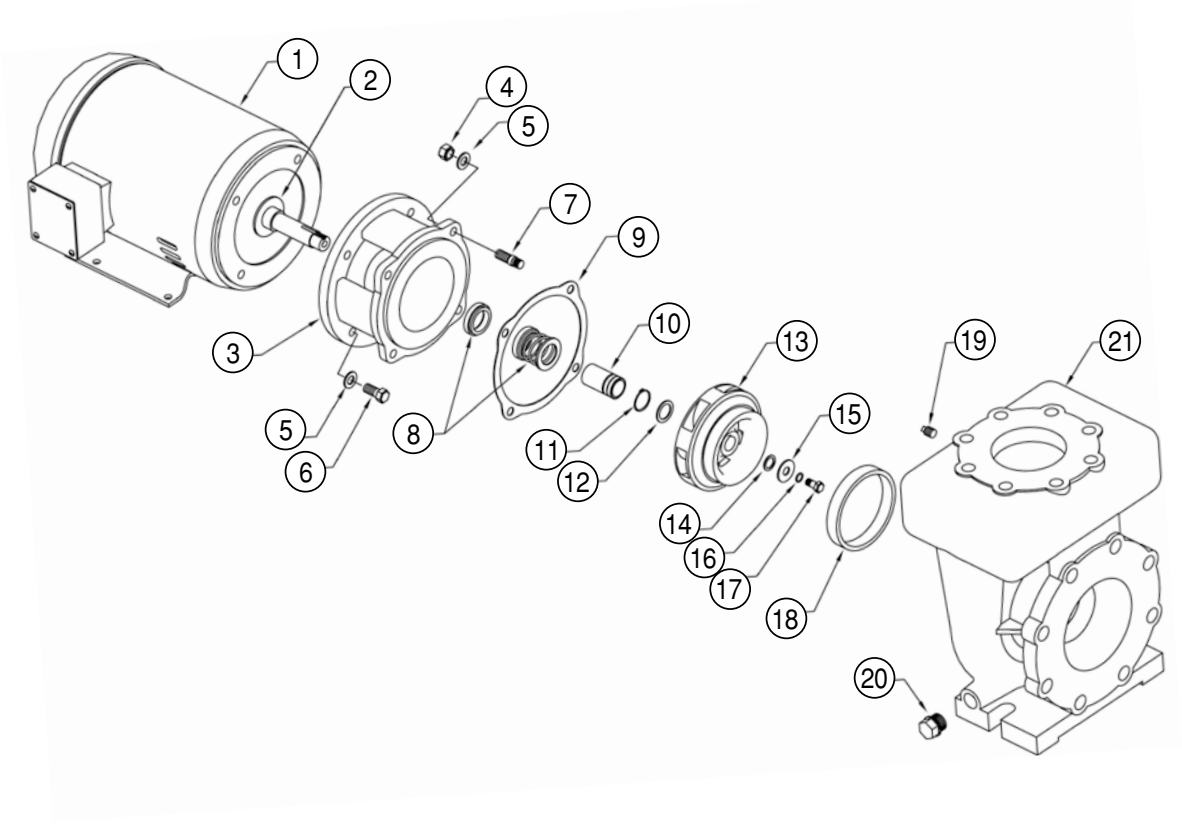

Waterco Top Mount Sand Filters

Part Number	Product Description	Diagram No.	LIST PRICE
	Micron Top Mount Filter Tanks		
220124	S600 Tank inc base & under drain assembly		£385.46
220128	S700 Tank inc base & under drain assembly		£552.60
220229	S702 Tank inc base & under drain assembly		£576.48
220130	S750 Tank inc base & under drain assembly		£637.89
220132	S800 Tank inc base & under drain assembly		£682.11
220136	S900 Tank inc base & under drain assembly		£893.72
220140	S1000 Tank inc base & under drain assembly		£1,221.19
220142	S1050 Tank inc base & under drain assembly (2"		£1,506.59
2201420	S1050 Tank inc base & under drain assembly (2½")		£1,378.58
220148	S1200 Tank inc base & under drain assembly (2")		£1,528.20
2201480	S1200 Tank inc base & under drain assembly (2½")		£1,482.35
22048801	S1200 Tank inc base & under drain assembly (3")		£2,232.07
	Micron Deep Bed Top Mount Filter Tanks		
2244001	SD400 Tank & under drain assembly		£324.06
2245001	SD500 Tank & under drain assembly		£365.00
2246001	SD600 Tank & under drain assembly		£467.33
2247501	SD750 Tank & under drain assembly		£805.04
2249001	SD900 Tank & under drain assembly		£1,129.10
	Thermoplastic Top Mount Filter Tanks		
220340	T400 Tank inc under drain assembly		£143.27
220345	T450 Tank inc under drain assembly		£167.15
220350	T500 Tank inc under drain assembly		£204.67
220360	T600 Tank inc under drain assembly		£262.66
	Micron/Thermoplastic Common Parts		
620892	Manifold threaded 1½”		£23.48
620893	Manifold threaded 2”		£23.48
W02111PP	Lateral threaded 75mm		£2.09
W02112PP	Lateral threaded 110mm		£2.41
W02113PP	Lateral threaded 145mm		£3.30
W02114PP	Lateral threaded 200mm		£4.14
W02117PP	Lateral threaded cap female		£1.41
6209251	Lateral threaded plug male		£2.04
W02026	Drain plug assembly (15mm)		£14.18
WO4058	Drain plug assembly (1½"/50mm)		£58.23
62100	Valve Neck O Ring (suits 1½" MPV)		£5.39
62101	Micron Valve Gasket (2")		£34.91
62102	Micron S/S Dome Nut & Washer (set of 12)		£31.34
122243B	1½" Half Union (Black) c/w O Ring		£3.80
122245B	50mm European metric Half Union (Black) c/w O Ring		£3.80
64479	1½" Union O Ring		£0.57
634024B	2" Half Union (Black) c/w O Ring		£5.69
63402400	63mm European metric Half Union (Black) c/w O Ring		£5.69
6340241	2" Union O Ring		£0.85
6340803	3" Half Union (Black) c/w O Ring		£17.06
6340803E	90mm European metric Half Union (Black) c/w O Ring		£17.06
6302550	3" Half Union O Ring		£5.54
	Pressure Gauges		
62109	Pressure Gauge Back Mount		£20.09
62161	Pressure Gauge Side Mount		£20.09
621621	Pressure Gauge 110mm - 600 kPa		£134.61
621630	Pressure Gauge Back Mount (Oil Filled) 400 kPa (SD series)		£24.50
621632	Pressure Gauge Side Mount (Oil Filled) 400 kPa (SD series)		£24.50
621612	Pressure Gauge (air filled) Bottom mount- (35PSI/2.5Bar)		£15.46

Waterco Top Mount Sand Filters



THERMOPLASTIC SAND FILTER

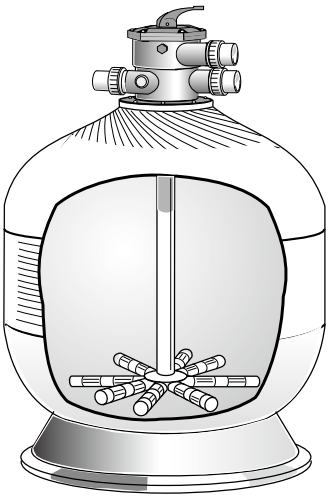

MICRON SAND FILTER

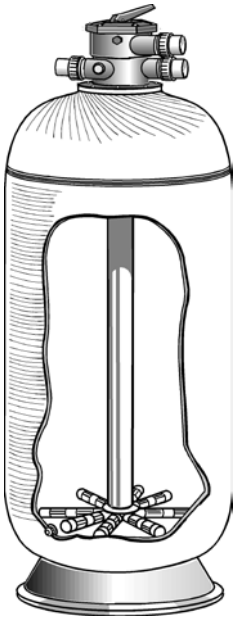

MICRON SD SERIES DEEP BED SAND FILTER

Part Number	Product Description	Diagram No.	LIST PRICE
620221	Air release valve	1	£3.30
620929	S/M Top Lid (threaded)	2	£35.69
620926	S/M Top Lid o ring 6”	3	£6.27
620940	S/M Water Diffuser (Funnel)	4	£15.64
6209291	SM 8” Lid	5	£28.37
62024BLK	Lock Ring for 8” Lid	6	£17.85
62026	SM Top Lid O ring 8”	n/s	£8.53
620944	Manhole Cover (Suit SM1050 and up)	n/s	£1,293.47
620266	S/M Manhole O Ring (SM1050 and up)	n/s	£28.19
121551	Threaded Fitting 1½" for Sweep Elbow	7	£1.43
121556	Threaded Fitting 2" for Sweep Elbow	7	£1.73
121550	Threaded Sweep Elbow 1½"	8	£2.98
121555	Threaded Sweep Elbow 2"	8	£3.58
63032/ WO2209BLK	Brrel Union Nut 1½"	9	£1.49
W02213	Barrel Union O Ring 1½"	n/s	£2.53
6340242B/ WO2948	Brrel Union Nut 2"	9	£2.21
6340241	Barrel Union O Ring 2"	n/s	£1.31
121558	Threaded Sweep Elbow Kit 1½"	7,8,9	£9.48
121559	Threaded Sweep Elbow Kit 2"	7,8,9	£13.29
6209302	Drain Plug (up to & including SM900 with 2" Ports)	n/s	£18.77
6209303	Drain Plug (SM900 with 3" Ports & SM1050 and up)	n/s	£32.54
620927	2" Bulk Head	n/s	£25.33
122282	3" Bulk Head	n/s	£33.14
620941	S/M top lid clamp type		£179.06
620269	S/M top lid o ring (clamp type)	n/s	£13.32
620943	S/M top lid clamp & knob only	n/s	£193.00
2290490EU	SM600 MPV c/w plumbing 1½” connection with European 50mm metric tail piece		£81.22
2290491EU	SM600 MPV c/w plumbing 2” connection with European 63mm metric tail piece		£108.29
2290590EU	SM750/900 MPV c/w plumbing 2” connection, European 63mm metric tail piece		£108.29

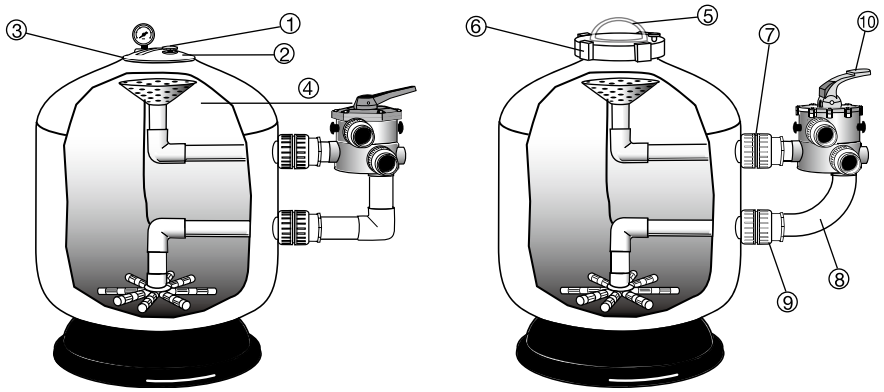

Part No:		W02111PP	W02112PP	W02113PP	W02114PP	W02117PP	6209251	6208931	6208932	6208933
		LATERALS				Lateral End Cap (female)	Lateral End Plug (male)	HRZ Cross Tee	HRZ LCT Extension	HRZ LCT End Cap
Model	Manifold	75mm	110mm	145mm	200mm					
SM400	50mm / 1 ½"	8	-	-	-	8	-	-	-	-
SM500	50mm / 1 ½"	-	-	8	-	8	-	-	-	-
SM600 40mm Port	50mm / 1 ½"	8	8	-	-	8	-	-	-	-
SM600 50mm Port	63mm/2"	8	8	-	-	8	-	-	-	-
SM700	63mm/2"	-	-	-	8	8	-	-	-	-
SM750	63mm/2"	8	-	8	-	8	-	-	-	-
SM800	63mm/2"	-	8	8	-	8	-	-	-	-
SM900	63mm/2"	8	-	-	8	8	-	-	-	-
SM900 90mm/3" Port	-	4	22	4	2	36	4	2	8	4
SM1050	-	8	20	10	4	32	4	2	8	4
SM1200	-	2	26	8	6	36	4	2	8	4
SM1400	-	8	8	36	14	48	4	2	12	4
SM1600 90mm/3" Port	-	4	16	42	18	48	4	2	12	4
SM1600 110mm/4" Port	-	10	22	22	38	-	60	-	-	-
SM1800	-	8	42	22	60	-	76	-	-	-
SM2000	-	2	52	20	74	-	84	-	-	-
SM2200	-	20	34	78	88	-	100	-	-	-

WATERCO
Water, the liquid of life

SMD / SMDD SIDE MOUNT DEEP BED FILTERS

Part Number	Product Description	Nos.	Diagram No.	LIST PRICE
620944	Man Hole Cover Single Yoke (pre 2007)		1	£1,430.54
6209440	Man Hole Cover 4 Stud Complete		1	£1,065.51
621632	Pressure Gauge Side Mount (Oil Filled) 400kPa		2	£23.12
621621	Pressure Gauge Dry 600KPA/90PSI Bottom Mount		2	£134.61
6340939	Hex Nut M16 (4 required)	4	3	£1.65
6340937	Washer M16 S/S304 (8 required)	8	4	£0.91
6209430	Lid Yoke Lacron (2 required)	2	5	£78.37
W12324	Hex Thin Nut (4 required)	4	6	£8.90
6209443	O ring Manhole Cover Oval 4 Stud - Waterco	1	7	£74.20
620266	O ring SMDD Manhole - Oval (SM1050 up) (350x460x10)		7	£31.20
W12724	S/S Screw 1" BSW Male 1/4" BSP Female Thread	1	8	£100.17
6209442	Manhole Cover Only Oval 4 Stud - Waterco	1	9	£425.91
6340412	O ring BS113 (4 required)	4	10	£0.22
W12125	Hex Bolt N16X120MM (4 required)	4	11	£14.84
6340803	Barrel Union Lock Nut 80mm Black (2 required)	2	12/13	£27.50
6340801	Barrel Union Lock Nut 100mm Black (2 required)	2	12/13	£47.11
6302550	O ring B/U 80mm	2	14	£6.15
6302553	O ring B/U 100mm	2	14	£14.32
62380	Sight Glass 3" Complete (Pre 2008)	1	15	£159.40
W12132	Sight Glass 3" Acrylic Cap (Pre 2008)	1	15	£181.79
6209470	Side Manhole Cover 18 Hole Oval	1	16	£509.01
6209491	Side Hatch Round 200mm	1	16	£281.74
6209471	Gasket for Side Manhole Oval 18 Hole	1	17	£28.12
6209492	O ring G210 for Side Hatch Round 200mm	1	17	£7.20
6209302	Drain Plug complete 15mm	1	18/19/20	£20.78
6209303	Drain Plug complete 40mm	1	18/19/20	£35.99
64479	O ring 40mm B/U EPDM		21	£1.00
620940	Funnel For Port Size 3" & 4" (80mm & 10mm) (4 required)	4	22	£22.93
621013	Funnel for Port Size 6" (150mm) (4 required)	4	22	£46.00
620223	Air Relief Tube Screen	1	23	£3.50
86172	Gulfstream Plug (2 required)	2	24	£0.18

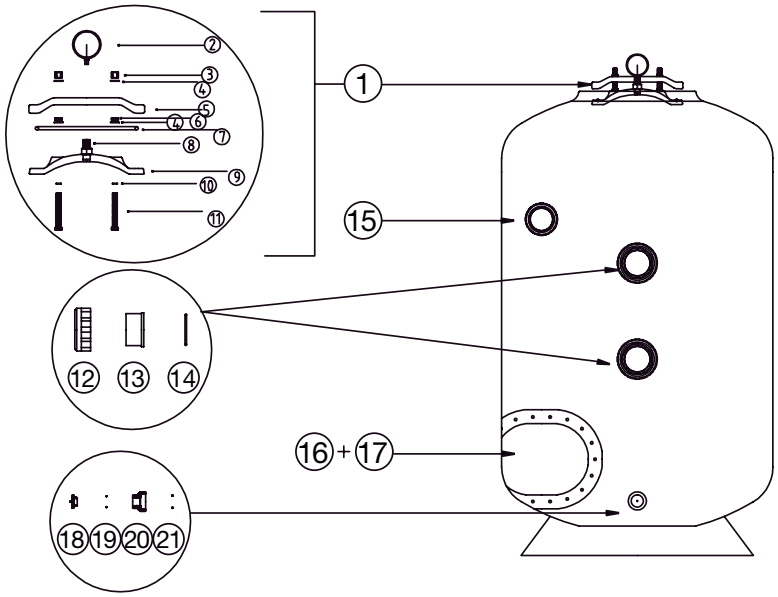

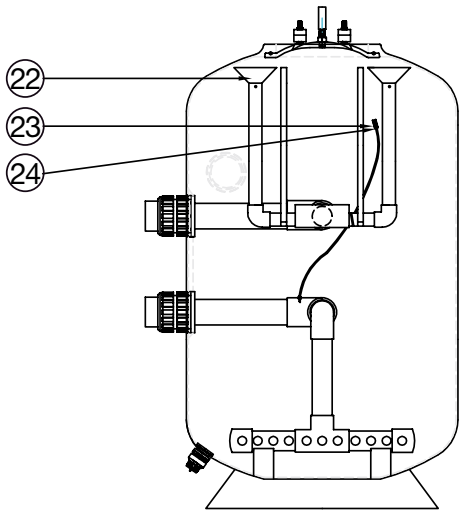

Micron SMDD Side Mount Deep Bed Sand Filters

Part No:		W02111	W02112	W02113	W02114	W02117	6209251	6208931	6208932	6208933	6200912	**#W02269BLK**	#W02270BLK
		LATERALS				Lateral End Cap Nut	Lateral End Plug (male)	HRZ Cross Tee	HRZ LCT Extension	HRZ LCT End Cap	Extension Arm	Cap Body	Cap Nut
Model	Manifold	75mm	110mm	145mm	200mm								
SMD/SMDD400	50mm / 1 ½"	8	-	-	-	8	-	-	-	-	-		
SMD/SMDD500	50mm / 1 ½"	-	-	8	-	8	-	-	-	-	-		
SMD/SMDD600	50mm / 1 ½"	8	8	-	-	8	-	-	-	-	-		
SMD/SMDD750	63mm/2"	8	-	8	-	8	-	-	-	-	-		
SMD/SMDD900 63mm/2" Port	63mm/2"	8	-	-	8	8	-	-	-	-	-		
SMD/SMDD900 90mm/3" Port	-	4	22	4	2	36	4	2	8	4	-		
SMD/SMDD1050 63mm/2" Port	63mm/2"	-	8	8	-	8	-	-	-	-	-		
SMD/SMDD1050 75mm / 2 ½" Port	75mm / 2 ½"	8	16	-	12	20	-	-	-	-	8	4	4
SMD/SMDD1050 90mm/3" Port	-	8	20	10	4	32	4	2	8	4	-		
SMD/SMDD1200 63mm/2" Port	63mm/2"	8	-	-	16	8	-	-	-	-	-		
SMD/SMDD1200 75mm / 2 ½" Port	75mm / 2 ½"	16	4	20	12	28	-	-	-	-	12	4	4
SMD/SMDD1200 90mm/3" Port	-	2	26	8	6	32	4	2	8	4	-		
SMD/SMDD1200 90Port wLateral manhole#620947	-	3	6	25	6	32	4	2	8	4	-		
SMD/SMDD1200 110mm/4" Port	-	4	4	4	36	-	48	-	-	-	-		
SMD/SMDD1400 90mm/3" Port	-	8	8	36	14	48	4	2	12	4	-		
SMD/SMDD1400 110mm/4" Port	-	10	8	12	32	-	52	-	-	-	-		
SMD/SMDD1600 90mm/3" Port	-	4	16	42	18	48	4	2	12	4	-		
SMD/SMDD1600 110mm/4" Port	-	10	22	22	38	-	60	-	-	-	-		
SMD/SMDD1600 160mm/6" Port		18	8	80	14	-	68	-	-	-	-		
SMD/SMDD1800 110mm/4" Port	-	8	42	22	68	-	76	-	-	-	-		
SMD/SMDD1800 160mm/6" Port	-	46	4	22	68	-	76	-	-	-	-		
SMD/SMDD2000 110mm/4" Port	-	2	52	20	74	-	80	-	-	-	-		
SMD/SMDD2000 160mm/6" Port	-	22	54	30	68	-	80	-	-	-	-		
SMD/SMDD2000 160Port wLat-eral manhole #620947		22	53	29	68		80	-	-	-	-		
SMDD2200 160mm/6" Port	-	64	34	30	88	-	96	-	-	-	-		
SMD/SMDD2350 160mm/6" Port	-	4	62	42	122	-	104	-	-	-	-		
SMD/SMDD2500 160mm/6" Port	-	54	4	20	160	-	108	-	-	-	-		

Hydron Commercial Sand Filters

Part Number	Product Description	Diagram No.	LIST PRICE
12221001	Barrel Union plain end 4"		£7.21
12221003	Barrel Union locking nut		£6.80
620945	Man hole cover - Trapezium		£999.22
620946	Hydron Commercial Lid Gasket - Trapezium		TBA
62022	Air relief valve		£3.30
621621	Pressure gauge 600 kPa		£126.55
WO4058	Large sand drain assembly		£33.78
1216150	P.V.C. flange (suits M3750-5000)		£88.90
W02111	Lateral 75mm (threaded)		£2.09
W02112	Lateral 110mm (threaded)		£2.41
W02113	Lateral 145mm (threaded)		£3.30
W02114	Lateral 200mm (threaded)		£4.14
W02117	Lateral threaded cap		£1.41
6209251	Lateral threaded plug		£1.41

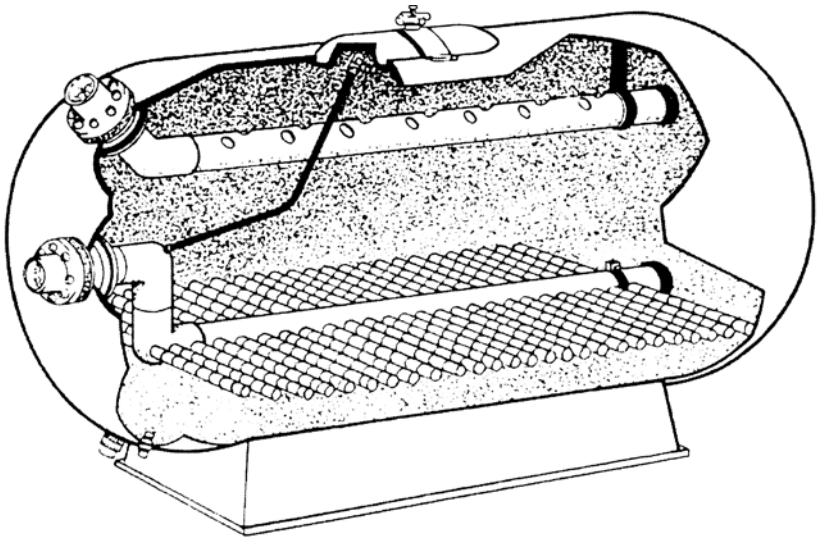

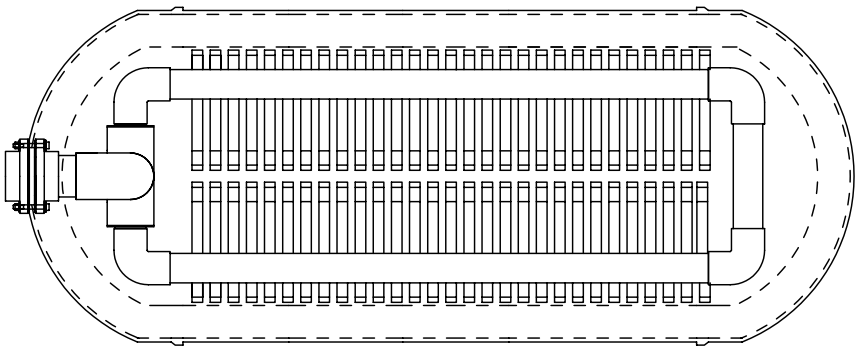

Pre 2007

Part No:		W02111	W02112	W02113	W02114	W02117	6209251	6208931	6208932	6208933
		LATERALS				Lateral End	Lateral End	HRZ Cross	HRZ LCT	HRZ LCT
Model	Manifold	75mm	110mm	145mm	200mm	Cap (female)	Plug (male)	Tee	Extension	End Cap
M2500	-	-	-	36	36	-	36	-	-	-
M3750	-	116	-	-	58	-	116	-	-	-
M5000	-	168	-	-	84	-	168	-	-	-

Looped Pipework

Part No:		W02111	W02112	W02113	W02114	W02117	6209251	6208931	6208932	6208933
		LATERALS				Lateral End	Lateral End	HRZ Cross	HRZ LCT	HRZ LCT
Model	Manifold	75mm	110mm	145mm	200mm	Cap (female)	Plug (male)	Tee	Extension	End Cap
M2500	-	-	-	36	36	-	72	-	-	-
M3750	-	116	-	-	58	-	116	-	-	-
M5000	-	168	-	-	84	-	168	-	-	-
M6500	-	-	-	-	120	-	60	-	-	-

Part Number	Product Description	Diagram No.	LIST PRICE
62040	Cartridge C25	1	£54.58
62042	Cartridge C50	1	£78.46
62044	Cartridge C75	1	£102.34
62048	Cartridge CC50	1	£78.46
62049	Cartridge CC75	1	£102.34
62050	Cartridge CC100	1	£133.03
62109	Pressure gauge back mount	2	£20.09
62161	Pressure gauge side mount	2	£20.09
62021	Lid O Ring MK2	3	£8.53
62020	Lid c/w o ring MK2 (OD 221mm)	4	£36.33
62025	Lid c/w o ring MK3 - Pewter colour (OD 214mm)	4	£36.33
62028 - 0501	Lid c/w o ring MK3 - Pewter colour 6 Bar	4	£36.33
62026	Lid o ring MK3	3	£8.53
620260	Lid O Ring MK3 BS369 Viton	3	£16.81
620231	Lock Ring Mk2 (4 threads)	5	£17.86
62024BLK	Lock ring Mk3 (5 threads)	5	£17.85
620221	Air release valve MK2	8	£3.30
620193	O Ring air release valve	n/s	£1.91
6201931	O Ring air release valve BS112 Viton	n/s	£1.85
620671	C25 MK3 tank	9	£201.57
620691	C50/CC75 MK3 tank	9	£170.56
620681	CC50 compact MK3 tank	9	£191.02
620711	C75/CC100 MK3 tank	9	£221.73
62073	C100/CC150 MK3 tank	9	£231.41
122244	1½" Half union c/w o ring	11	£4.24
122245	1½" Half union c/w o ring & European 50mm metric tail piece	11	£4.24
62032	Union washer 1½"	11	£0.69
W02046	Cartridge spacer C100	n/s	£4.97
122254	1½" / 2" Half union MK3 (PRE 2001)	11	£6.21
122255	Half union Trimline MK3 European market	11	£6.21
122257BLK	1½" / 2" Half union MK3 (POST 2001)	11	£6.21
W02280	Union o ring 1½" / 2" MK2	11	£2.05
620342	O Ring Half Union BS332 Viton	11	£4.47
6340246BLK	Metric sleeves		£1.79

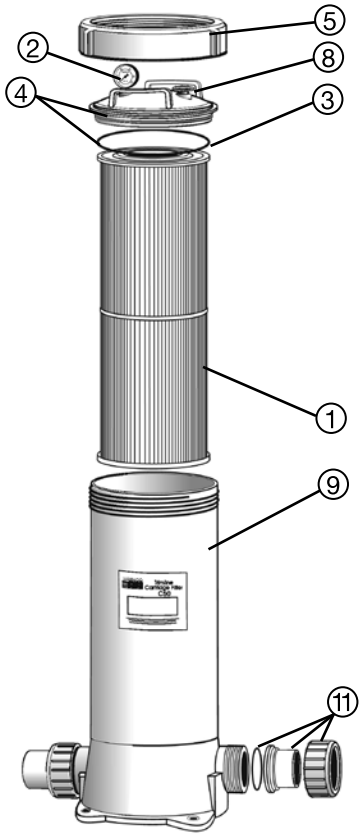

Fulflo Cartridge Filter

Part Number	Product Description	Diagram No.	LIST PRICE
621632	Pressure gauge side mounted oil filled (400 kPa)	1	£24.50
620221	Air release valve	2	£3.62
822350	Top adaptor	3	£13.81
62231	Tank Top (C 200)	4	£84.35
62232	Tank Top (C 300)	4	£152.61
62233	Tank Top (C 400)	4	£169.43
62202	Clamp ring assembly (c/w knob, bolt & lug)	5A	£134.60
62203	Knob, bolt & lug - Clamp band	5	£26.30
WO2588	Element/Cartridge Joiner	7	£6.81
62236	Inner Band	9	£41.20
62250	Tank body "O" ring	10	£18.79
62268	Inlet baffle	11	£11.80
822343	Tank bottom (C200, C300, C400)	12	£161.95
822351	Bottom Adaptor	13	£13.81
822345	Bottom elbow 2"	15	£8.11
62228	Base/Tank Support	16	£88.40
122250	Barrel Union 2"	17	£16.58
62281	100 sq. ft. Cartridge (suit Fulflo 300)	6	£179.44
62282	180 sq. ft. Cartridge	6	£198.96
62293	200 sq. ft. Cartridge (suit Fulflo 200, 300, 400)	6	£234.69

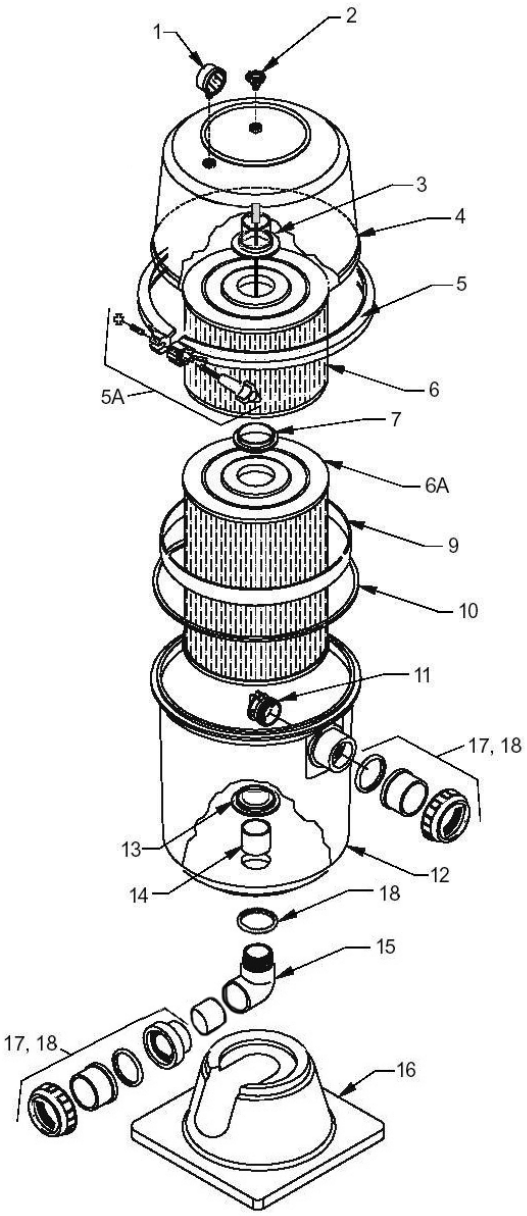

Top Load Cartridge Filter

Part Number	Product Description	Diagram No.	LIST PRICE
61209/62024BLK	Lid lock ring	1	£17.40
61206	Air release valve	2	£2.89
61207	Air release o ring	n/s	£1.45
61205	Lid	3	£13.31
61208	Lid o ring	4	£5.39
61213	Spacer ring	5	£2.17
62010	50sq ft cartridge	6	£64.81
62009	75sq ft cartridge	6	£88.70
61210	Top load filter tank 50	7	£43.39
61211	Top load filter tank 75	7	£59.66
61212	Body lock ring	8	£11.58
61200	Bi-pass valve	9	£10.41

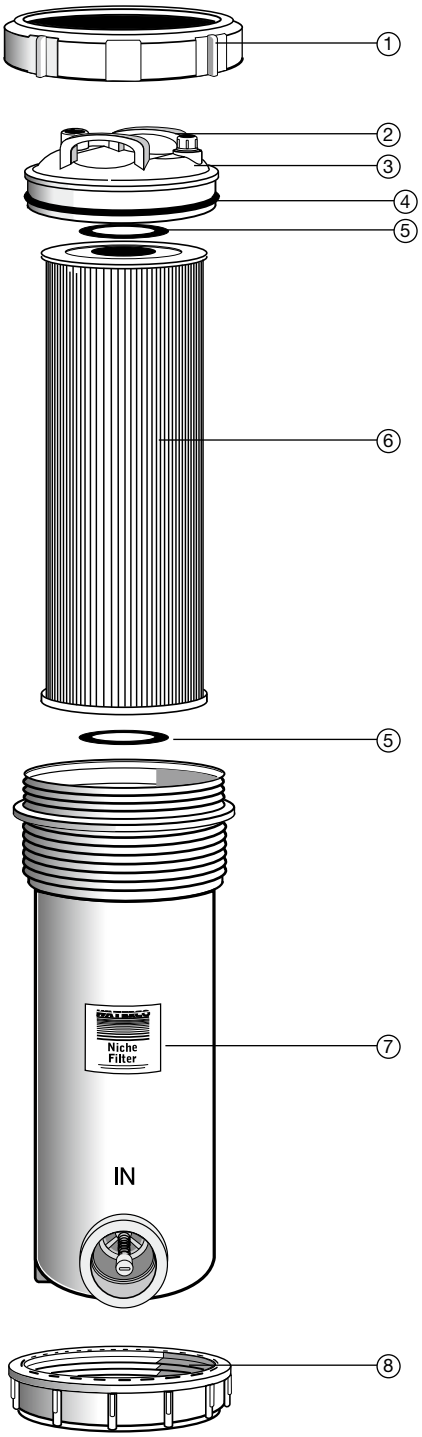

WATERCO
Water, the liquid of life

Astra Ful Flo D.E. Filter

Part Number	Product Description	Diagram No.	LIST PRICE
62231	Tank top low dome - P2016	1	£71.58
62232	Tank top high dome (grey) P2027,31	1	£129.78
62233	Tank top ultra high dome P2036,2048	1	£164.74
620221	Air release Valve c/w O Ring	2	£3.30
62202	P2145 clamp ring assy (c/w knob, bolt, lug)	3	£134.60
62203	P2153 Nally tank clamp knob, bolt, lug	3	£26.30
62250	P9109 Tank body O Ring	4	£18.79
62236	P2517 Inner band (grey tank)	6	£41.19
622361	Inner band (tank brown)	6	£41.19
822343	Tank body ultra bottom-P2016,27,31,36 Grey (not interchangeable wth br tank)	7	£200.67
62109	Pressure Gauge Back Mount	8	£17.40
62161	Pressure Gauge Side Mount	8	£20.09
W02213	Union O ring (post 3/98)	10	£2.53
6340241	Union O ring 50mm P2027 - 48 (BS332)	10	£0.85
62205	P2123 Union adapter assy	11	£18.21
822327	90 Deg elbow union - P2016,27,31	13	£17.05
62206	P2124 90º elbow union assy P2036,48	13	£22.06
62208	P2176 Complete septum - 2016	14	£338.44
62209	P2146 Complete septum - P2027,31	14	£338.44
62210	P2157 Complete septum - P2036	14	£381.83
62211	P2206 Complet septum - P2048	14	£474.15
62207	P2126 Manifold assy	15	£39.46
62212	P2177 - 150 filter grid - P2016	16	£34.92
62213	P2179 - 250 filter grid - P2016	17	£37.05
62214	P2181 - 250 offset filter grid - P2016	18	£37.05
62215	P2183 - 310 Filter grid - P2016	19	£40.76
62216	P2147 - 150 filter grid - P2027,31 - 450 long 2 per filter	16	£48.01
62217	P2148 - 250 filter grid - P2027,31 - 450 Long 2 per filter	17	£57.68
62218	P2149 - 250 offset filter grid - P2027, 31 - 450 Long 2 per filter	18	£57.68
62219	P2150 - 310 filter grid - P2027,31 - 450 long 4 per filter	19	£64.12
62220	P2158 - 150 filter grid - P2036 - 630 long 2 per filter	16	£48.83
62221	P2160 - 250 filter grid - P2036 - 630 long 2 per filter	17	£58.48
62222	P2162 - 250 offset filter grid - P2036 - 630 long 2 per filter	18	£58.48
62223	P2164 - 310 filter grid - P2036 - 630 long 4 per filter	19	£66.90
62224	P2210 - 150 filter grid - P2048 - 810 long 2 per filter	16	£75.93
62225	P2214 - 250 filter grid - P2048 - 810 long 2 per filter	17	£102.51
62226	P2211 - 250 offset filter grid - P2048 - 810 long 2 per filter	18	£102.51
62227	P2213 - 310 filter grid - P2048 - 810 long 4 per filter	19	£107.63
62234	P2337 Clamp Plate	20	£48.25
62237	P2547 Tie rod - P2016	21	£15.43
62238	P2521 Tie rod - P2027,31	21	£18.65
62239	P2538 Tie rod - P2036	21	£20.22
62240	P2545 Tie rod - P2048	21	£22.43
122243B	Half Barrel Union 1½" (post 03/98)	23	£3.81
122245B	Half Barrel Union 50mm	23	£3.81
634024B	Half Barrel Union 50mm 2027- 48 (post 03/98)	23	£5.68
634024EURO	Half Barrel Union 63mm	23	£5.68
823318	90 degree elbow threaded 1½"	24	£6.14
822345	90 degree elbow threaded 2"	24	£6.14
823319	90 degree elbow O Ring	25	£2.30
62248	P9125 Adapter O Ring each end of elbow		£2.12
622290	P2014/16 KIT Grey top and bottom & clamp & inner band & knob		£275.81
622291	P2027/31 KIT Grey top & bottom & clamp & inner band & knob		£295.18
622292	P2036 KIT Grey top & bottom & clamp & inner band & knob		£330.77
622301	P2048 KIT Grey top & bottom & clamp & inner band & knob		£366.34
2390495	P2027/P2031 M.P.V.-1½" c/w plumbing kit	9	£88.70
23905832	P2036 M.P.V.- 2" c/w plumbing kit	9	£129.63
23905932	P2048 M.P.V - 2" c/w plumbing kit	9	133.031

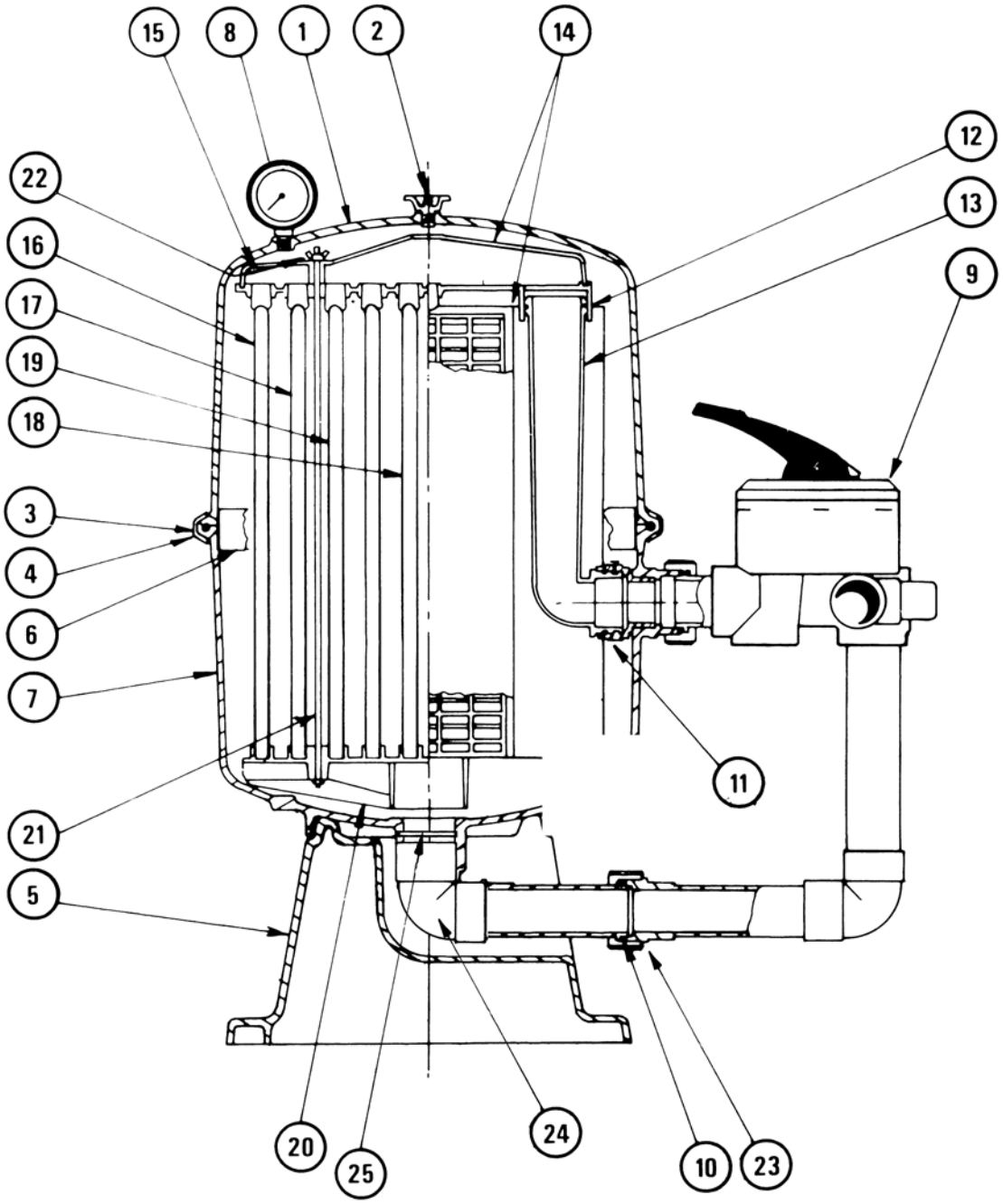

TANK PORT SIZE	MODEL	CODE	CONNECTION	
		MPV C/W Plumbing Kit	TANK	MPV
	P2027	2390495 / 2390495EU	Top - Male	Top - Female
2" (63mm)	P2036	23905832 / 2390583EU		
	P2048	23905932 / 2390593EU	Bottom - Male	Bottom - Female

Multiport Valve Table

MULTIPORT VALVE TABLE

Part Number	Product Description: MPV TYPE	SUITS FILTER MODEL
	TOP MOUNT MPVs All valves come complete with quick connect unions.	
2280441EUM	50mm c/w unions	S500-700; F400-700; T400-600
228053EURO	63mm male threaded port (W)	S702-S1200; F702
2280600	2½" MPV slip fit	S1050 - S1200
228800	3" MPV	S1200 - S1400
2280443EUM	1½" Collar Type c/w BU	S600 Premium
2280445EUM	1½"/50mm Clamp type Valve	S600/T600
	SIDE MOUNT MPVs	
2290422	50mm (1½") MPV BSP 4 language (Suits sweep elbow - 21558)	LSR 16" - 18" - 20" - 24"
4103	2" MPV (30" only suits sweep elbow 1215590)	LSC30"- 36 - 2"
2290900	3"/90mm Side Mount MPV only	LSC36"- 3" - LSC42"
2290422	1½" / 50mm MPV 4 language - Metric & Imperial fittings (suits sweep elbow 121558)	LSR 16" - 18" - 20" - 24" SM400 - SM500; SMD400 - SMD600; SMDD400 - SMDD600
2290512EURO	2"/63mm MPV only	SM700 - SM900
2290512	2"/63mm MPV only BSP (suits sweep elbow -121559)	SM750 - SM900; SMDD750 - SMDD900
2290501	2"/63mm 6 way MPV only Slip Fit	SM1050 - SM1200
22905040	2 ½"/75mm 6 way MPV only	SM1050 - SM1200
2290900	3"/90mm MPV only (Waterco)	SM1200 - SM1600; SMD900 - 1600; SMDD900 - 1600
2290905	3"/90mm MPV c/w p/kit (Waterco)	SM1200 - SM1600; SMD900 - 1600; SMDD900 - 1600
2290491EURO	1½" MK2 c/w p/kits 2" port with 63mm fittings	SM600 with 2" port
2290501	2 ½"/75mm Slip Fit c/w	SM1050 - SM1200
22805040	2 ½"/75mm Slip Fit c/w kit	SM1050 - SM1200
2291100	4" c/w p/kits	SM1600 - SM2200; SMDD1600 - 2000

6 Way Multiport Valve 1½” / 50mm

Part Number	Product Description	Diagram No.	LIST PRICE
621467	1½" 6 way Top Cover MK2 (4 languages)	1	£35.28
621457	Axle o ring (2 required)	2	£3.34
621452	Teflon ring	3	£4.84
621458	Rotor	4	£29.34
621456	Spring	5	£7.17
621454	Top cover gasket	6	£5.39
621406	TM Body Assembly (body, diff, adaptor, O ring)	7	£60.44
621460	Spider gasket (5 spoke)	8	£24.65
WO2691	O Ring AS225	9	£5.39
621455	Valve Teflon Ring 1½"	10	£3.59
621463	Sight glass	11	£10.23
621462	Sight glass gasket	12	£3.43
621111	Handle pin	13	£2.68
621451	Handle Waterco	14	£17.40
620221	Air relief Valve Black	15	£3.30
122243B	1½” Half union (3 required)	16	£3.81
122245B	50mm Half union (3 required)	16	£3.81
WO2068	Top Cover O Ring	17	£6.08
WO2758	1½" 6 way MPV ¼" x 28 screws	18	£4.24

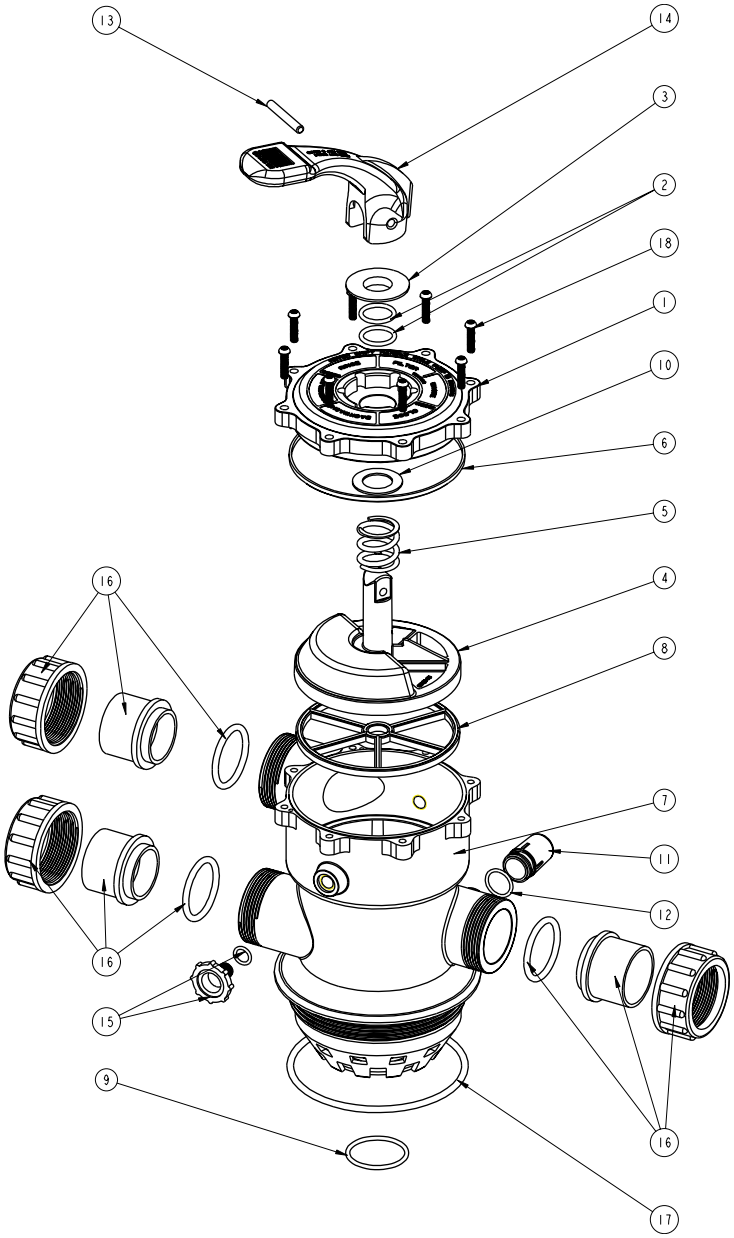

WATERCO
Water, the liquid of life

6 Way Multiport Valve 2” / 63mm

Part Number	Product Description	Diagram No.	LIST PRICE
621451	Handle	1	£17.40
621111	Handle Pin	2	£2.68
62137	Top Cover Bolts (Set of 10)	3	£2.98
6211301	Top cover	4	£40.25
621105	Teflon Washer	5	£0.68
621161	Teflon Spring Washer	6	£4.23
621181	Spring	7	£8.12
621201	Valve axle o ring (2 required)	8	£3.70
621231	Rotor	9	£39.23
620221	Air Release Valve & O Ring	10	£3.30
621302	Body - inc spider gasket (Top Mount)	11	£84.25
621381	Sight glass	12	£12.97
621341	Sight glass gasket	13	£4.03
634024	2” Half union	14	£5.68
63402400	63mm European metric half union	14	£5.68
6340241	2” union o ring	15	£0.86
621261	Spider gasket (black)	16	£40.74
62135	Top cover nuts (set of 10)	17	£4.31
621151	Top Cover O Ring	18	£9.18
621320	Centre Stem O Ring	19	£3.42
62101	Valve plate tank gasket	n/s	£34.92
62132	Top Assembly Complete - 2"	1-9 & 18	£93.87

50mm Waterco Valve

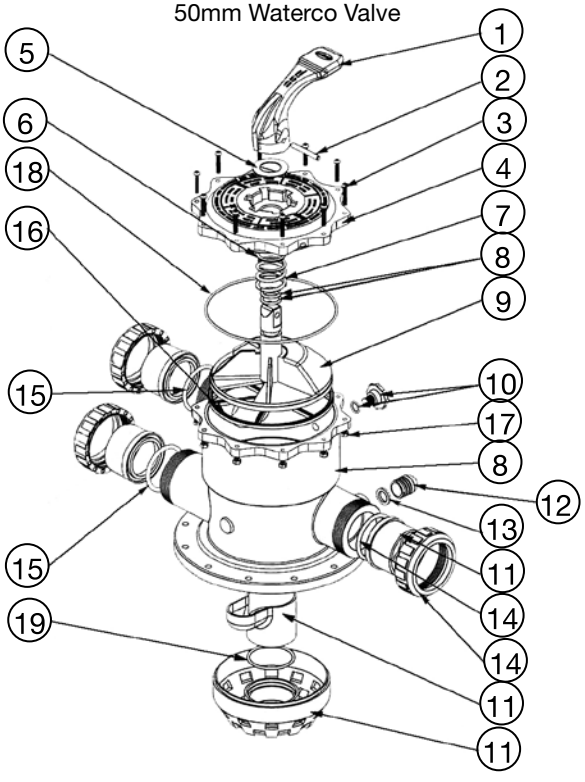

50mm Multiport Valve Pre 1999

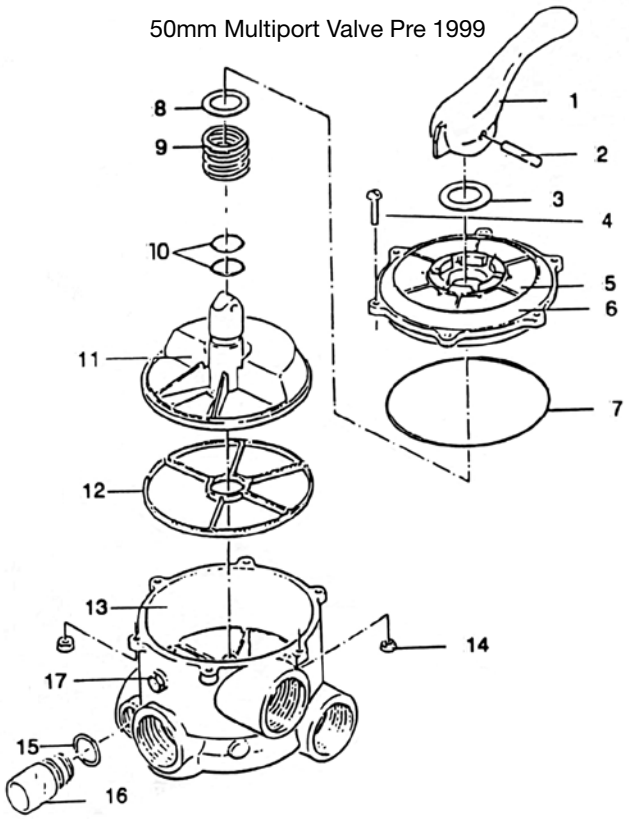

4 Way Multiport Valve - 1½” / 50mm

Part Number	Product Description	Diagram No.	LIST PRICE
321476	Rotor with Spider gasket	1, 7	£30.75
621470	MPV 4 way top cover	2	£16.77
621452	Teflon ring	3	£4.84
621457	Axle o ring - BS214	4	£3.34
621455	Teflon spring washer	5	£3.59
621477	Spring	6	£14.18
621475	MPV 4 way spider gasket	7	£15.91
621479	Top cover o ring	8	£5.39
6214661	Body	9	£29.07
621473	Sleeve o ring 4 way MPV	10	£0.56
621451	Handle	11	£17.40

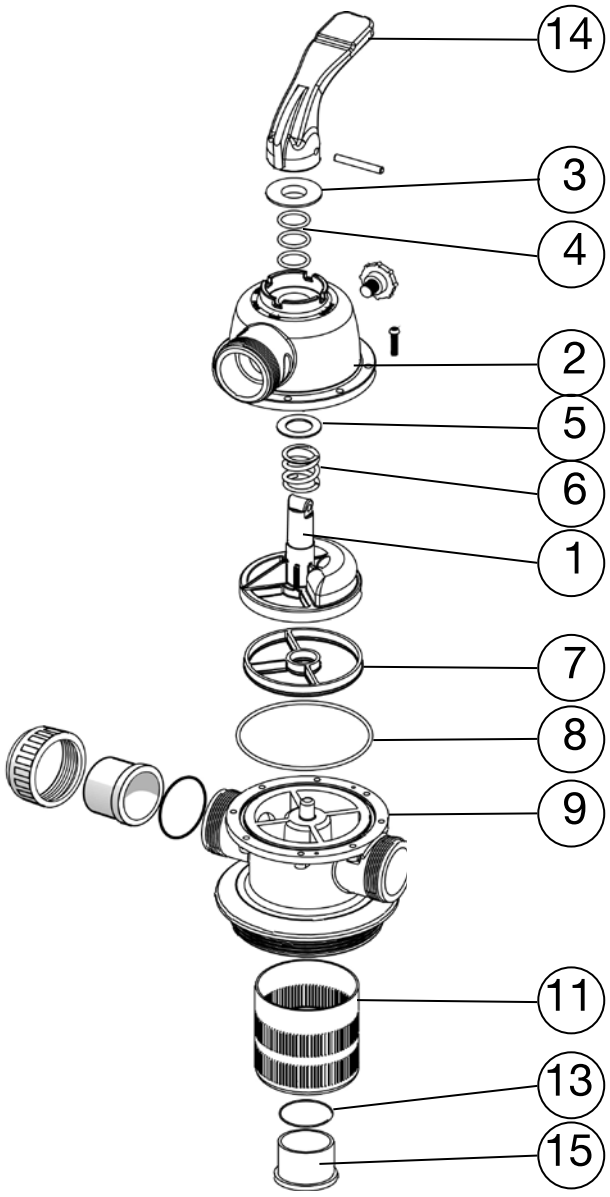

WATERCO
Water, the liquid of life

Multiport Valve Cont.

Part Number	Product Description	Diagram No.	LIST PRICE
	2½" (75mm) Waterco Valve Side Mount		
621451	Handle	1	£17.40
621111	Handle Pin	2	£2.68
621372	Bolt M6 x 32mm S/S 304	3	£2.98
621105	Rotor Washer	4	£0.68
621201	Valve Axle O Ring	5	£3.70
621161	Teflon Spring Washer	6	£4.23
621181	Spring	7	£8.12
621152	Lid O Ring	8	£18.36
621233	Rotor and Gasket	9	£91.49
620221	Air Release Valve (c/w O Ring) - Black	10	£3.30
620193	Air Release Valve O Ring - BS112	10	£1.67
6211302	Lid	11	£42.02
63406554	Half Union O Ring - BS338	12	£3.16
644492	2½"/3" Half Union c/w O Ring	13	£8.49
644493	75mm/90mm Half Union c/w O Ring	13	£8.49
621381	Sight Glass	14	£12.97
621341	Sight Glass Gasket	15	£4.03
621351	Lid Nut M6	16	£2.00
12780	3" Coupling	n/s	£6.73
127800	90mm Coupling	n/s	£6.73
	2½" (75mm) Waterco Valve Top Mount		
621451	Handle	1	£17.40
621111	Handle Pin	2	£2.68
621478	Screw M6 x 25mm	3	£2.05
621105	Rotor Washer	4	£0.68
621201	Valve Axle O Ring	5	£3.70
621161	Teflon Spring Washer	6	£4.23
621181	Spring	7	£8.12
621152	Lid O Ring	8	£18.36
621233	Rotor and Gasket	9	£91.49
620221	Air Release Valve (c/w O Ring) - Black	10	£3.30
6211302	Lid	11	£42.02
644492	2½"/3" Half Union c/w O Ring	13	£8.58
644493	75mm/90mm Half Union c/w O Ring	13	£8.58
63406554	Half Union O Ring - BS338	13	£3.16
621381	Sight Glass	14	£12.97
621341	Sight Glass Gasket	15	£4.03
6340113	Centre Pipe O Ring	16	£3.22
62027	O Ring (Neck) - BS452	17	£8.70
12780	3" Coupling	n/s	£6.73
127800	90mm Coupling	n/s	£6.73

75mm Side Mount

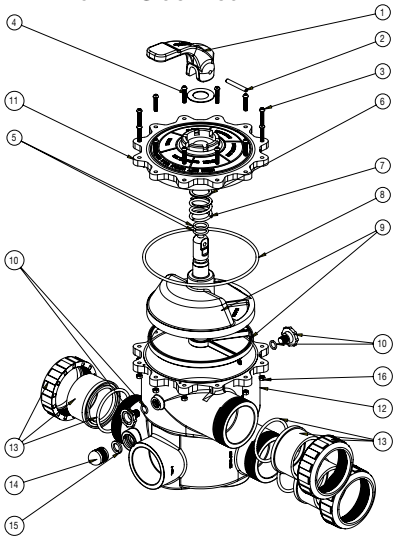

75mm Top Mount

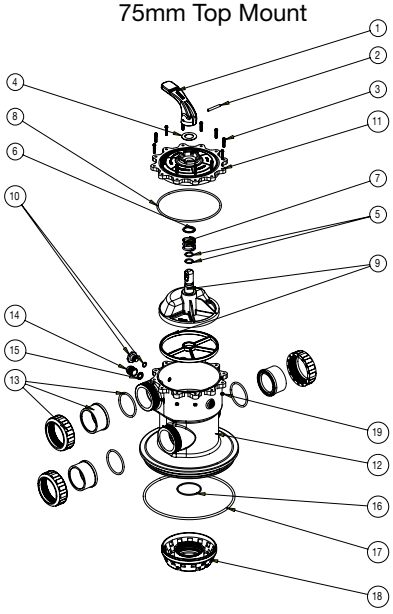

Part Number	Product Description	Diagram No.	LIST PRICE
	3" Waterco Valve Side Mount		
621100	Handle	1	£42.02
621193	Sleeve	2	£3.58
6211020	Handle Pin	3	£9.48
621202	Axle O Ring (2 required)	4	£3.14
621372	Bolt M6x32mm S/S 304	5	£3.01
621351	Nut M6	6	£2.00
6211310	Lid Printed	7	£77.84
621142	Lid O Ring - G245	8	£26.76
6211060	Washer	9	£1.19
621192	Spring 3"	10	£46.55
621243	Rotor	11	£146.02
621272	Spider Gasket	12	£31.29
6340803	Half Union with O Ring 80mm	14-16	£24.85
6302550	Half Union O Ring	16	£5.54
620221	Air Release Valve with O Ring	17	£3.30
621341	Sight Glass Gasket	18	£4.03
621381	Sight Glass	19	£12.97
	3" Waterco Valve Top Mount		
621100	Handle	1	£42.02
6211020	Handle Pin	2	£9.48
6211310	Lid Printed	3	£77.84
621243	Rotor	4	£146.02
621272	Spider Gasket	5	£31.29
6211060	Washer	6	£1.19
621192	Spring 3"	7	£46.55
621202	Axle O Ring (2 required)	8	£3.14
621193	Sleeve	10	£3.58
621142	Lid O Ring	11	£26.76
620221	Air Release Valve with O Ring	12	£3.30
621341	Sight Glass Gasket	13	£4.03
621381	Sight Glass	14	£12.97
6340803	Half Union with O Ring	15	£24.85
621371	Bolt M6x30	16	£2.96
621351	Lid Nut M6	17	£2.00
621194	Centre Stem (Diffuser) O Ring - P90	19	£4.47
W02742	Neck Ring O Ring	20	£25.15

90mm Waterco Valve Side Mount

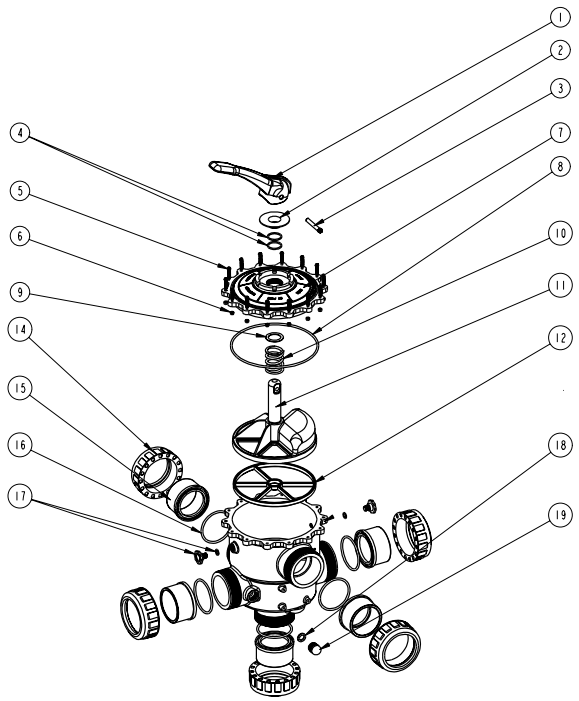

90mm Waterco Valve Top Mount

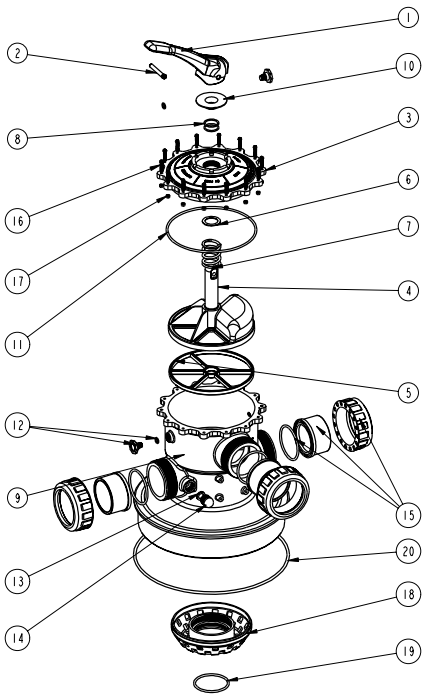

WATERCO
Water, the liquid of life

MultiCyclone

Part Number	Product Description	Diagram No.	LIST PRICE
61301	Top Plate Collector	1	£29.11
61304	Manifold Plate Assembly	2	£23.84
W12971	Diverter plate only		£12.23
61303	Internal Body MultiCylone Separator	4	£43.40
61300	MultiCyclone Body	5	£78.12
61302	Sediment Bowl	6	£124.76
62024BLK	Body Lock Ring TFC Lock Ring Blck	7	£17.41
61308	Body Ring 'O' Ring BS268 3 per	8	£4.74
W02469	Cartridge O Ring AS228	9	£2.26
61307	Sediment 'O' Ring BS263	10	£3.70
W12984	M6 Bolt M6 x 45 Hex SS304 12 per	11	£1.97
W22040	M6 Nut H/Nut SS316 12 per	12	£0.29
W12783	M6 Washer 1/4" x 9/16" ST304 12 per	13	£0.12
140252	1"Ball Valve Compact Ball 25mm	14	£12.24
61306	Baffle Ring	15	£9.14
61305	Sediment Bowl partition MultiCyclone	16	£6.31
W12783	M6 Spring Washer 1/4"	17	£0.12
1222252	1" Half Union Assembly 25mm Black	18	£5.15
63402400	63mm Half Union Assembly Black	19	£5.68
6340245	2" Half Union Assembly Black	19	£5.68

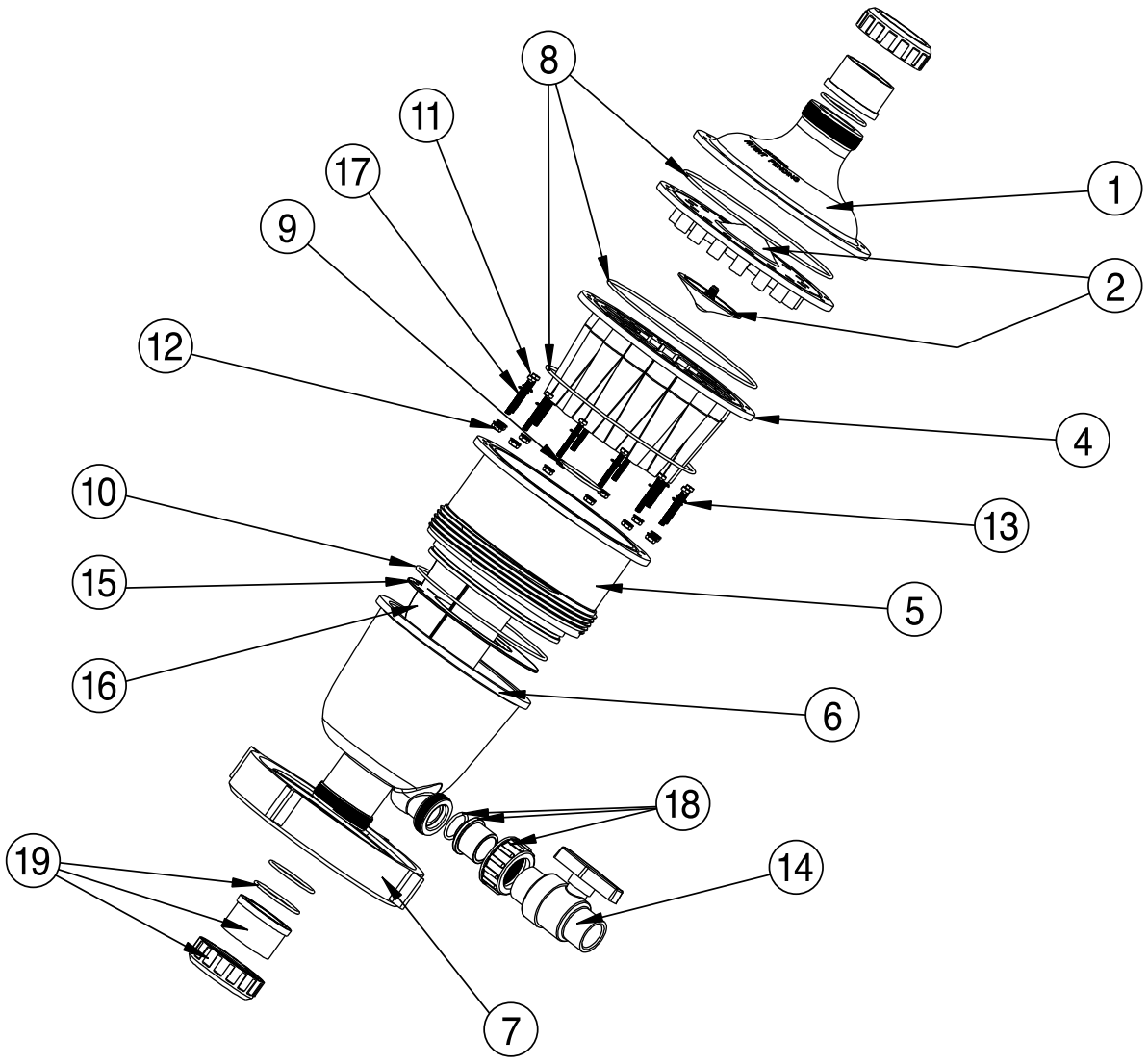

Part Number	Product Description	Diagram No.	LIST PRICE
1366A	18" Top Mount Internals (less candles)	1	£30.99
6007 (W02985)	120mm Lateral (candle) (6)	2	£7.55
1393	18" Lateral (candle) Set	3	£39.87
1314	Top Mount Valve O Ring	4	£8.10
6001 (W02026BLK)	Drain Plug Complete	5	£11.60
W02026ABLK	Drain Plug Cap	6	£4.85
621320	Centre Stem O Ring		£4.54

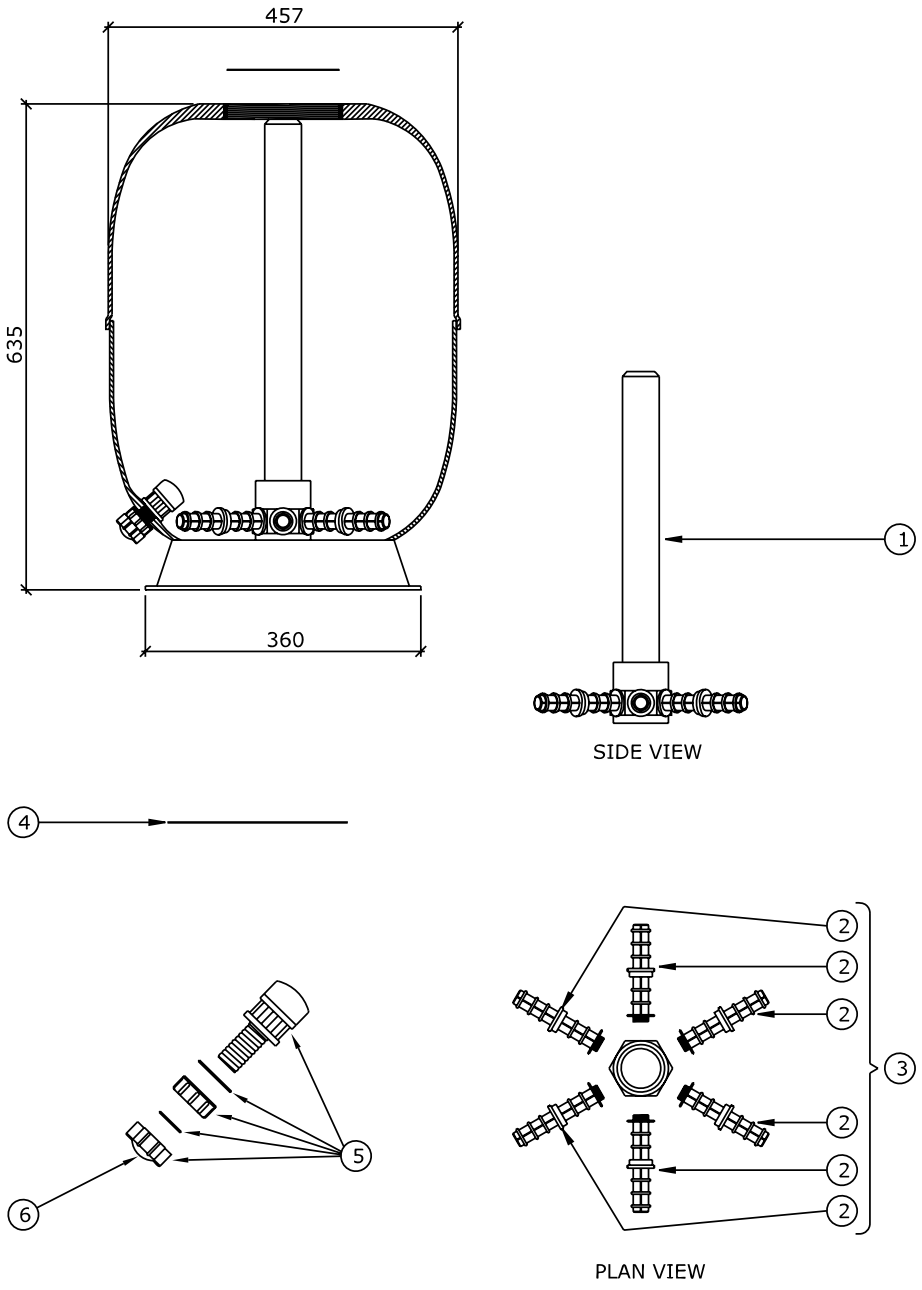

WATERCO
Water, the liquid of life

TMV-20

Part Number	Product Description	Diagram No.	LIST PRICE
1366	20” Top Mount Internals (less candles)	1	£32.48
6007	120mm Lateral (candle) (x 6)	2	£7.55
1393A	20” Lateral (candle) Set	3	£29.45
1314	Top Mount Valve O Ring	4	£8.10
6001 (W02026BLK)	Drain Plug Complete	5	£11.61
W02026ABLK	Drain Plug Cap	6	£4.84
621320	Centre Stem O Ring		£4.53

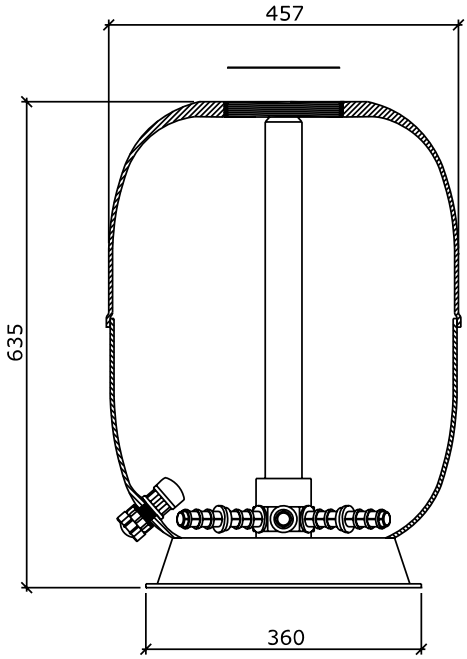

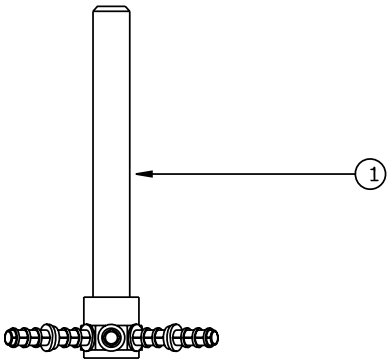

SIDE VIEW

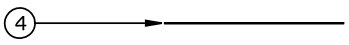

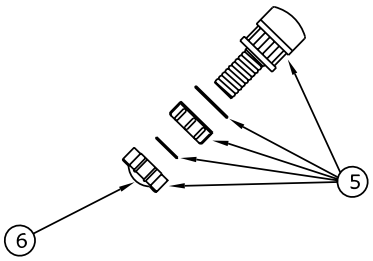

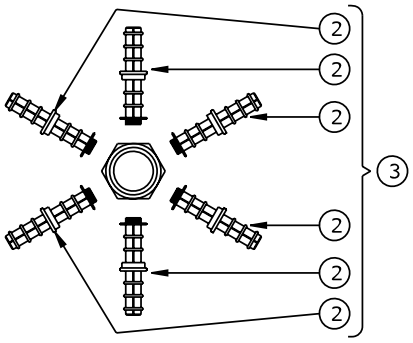

PLAN VIEW

Part Number	Product Description	Diagram No.	LIST PRICE
1367A	24" Top Mount Internals (less candles)	1	£36.08
6008 (W02984 + W02991)	180mm Lateral (X 6)	2	£8.36
1394A	24" Lateral (candle) Set	3	£44.20
1314	Top Mount Valve O Ring	4	£8.10
6001(W02026BLK)	Drain Plug Complete	5	£11.60
W02026ABLK	Drain Plug Cap	6	£4.85
621320	Centre Stem O Ring		£4.54

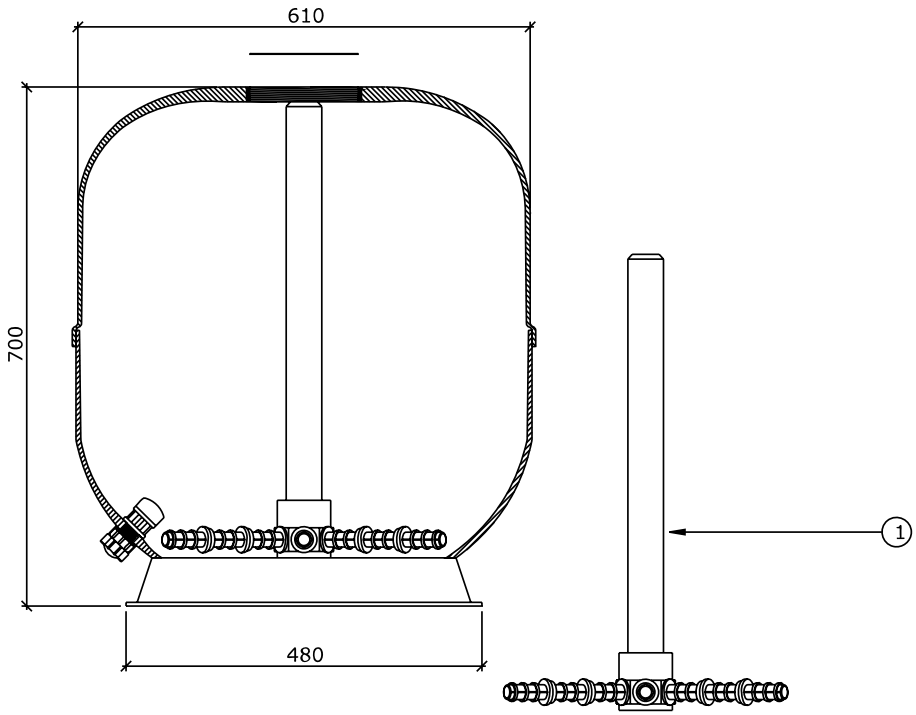

SIDE VIEW

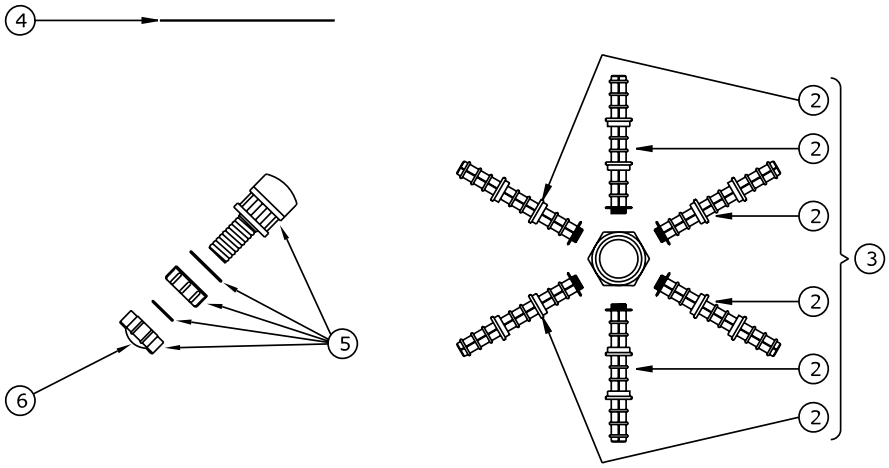

PLAN VIEW

LSR - 16

Part Number	Product Description	Diagram No.	LIST PRICE
6012 (1304A)	Lacron lid removal tool (8" new type) Metal	1	£34.72
W22235	Lid removal tool Plastic		£13.25
6000 (6209292)	Lid (8" new type) Polycarbonate	2	£52.99
6011 (621053)	Lid 'O' ring 8"	3	£8.99
620929	6" Polycarbonate Lid - drilled with two holes	2	£35.69
W02068	6" Lid 'O' Ring	3	£7.35
620221	Air relief tap (6" lid only)	n/s	£3.30
W02066	Rose distributor	4	£7.98
1366	1.5" Header (less rose)	5	£33.77
1671	3/4" Self tap screw (Pack of 10)	6	£4.79
W12045	Air bleed cap	7	£2.84
17100	16" Lacron air bleed	8	£2.87
1363	16" - 1.5" Underdrain less candles	9	£32.28
6007 (W02985)	120mm Lateral (candle) (X 6)	10	£7.55
1393	lateral (candle) set	11	£39.87
6013 (W02989 + W02271BLK)	1.5" Bulkhead fitting inc nut (Set of 2)	12	£18.21
6015 (1520)	1.5" Bulkhead Gasket (set of 2)	13	£8.36
6021 (W02981 + W02980)	1.5" Union adaptor inc sleeve (Set of 2)	14	£16.06
6004 (1522)	1.5" Union adaptor gasket (set of 2)	15	£5.08
6001 (W02026BLK)	Drain plug complete	16	£11.60
W02026ABLK	Drian plug - cap only	17	£4.85
W04002PP	16"/18"/20" Base Stand	n/a	£23.96
	POST 2004		
6023(W02209BLK + W02210BLK)	1.5" Union Adaptor nut and sleeve (set of 2)		£16.06
6026 (W02213)	1.5" Union adaptor 'O' Ring (set of 2)		£5.08

PLEASE NOTE: 1.1/2" Lacron filters manufactured pre 2004 will have union adaptors (Barrel Unions) with **flat gaskets**
1.1/2" Lacron filters manufactured post 2004 will have union adaptors (Barrel Unions) with 'O' rings

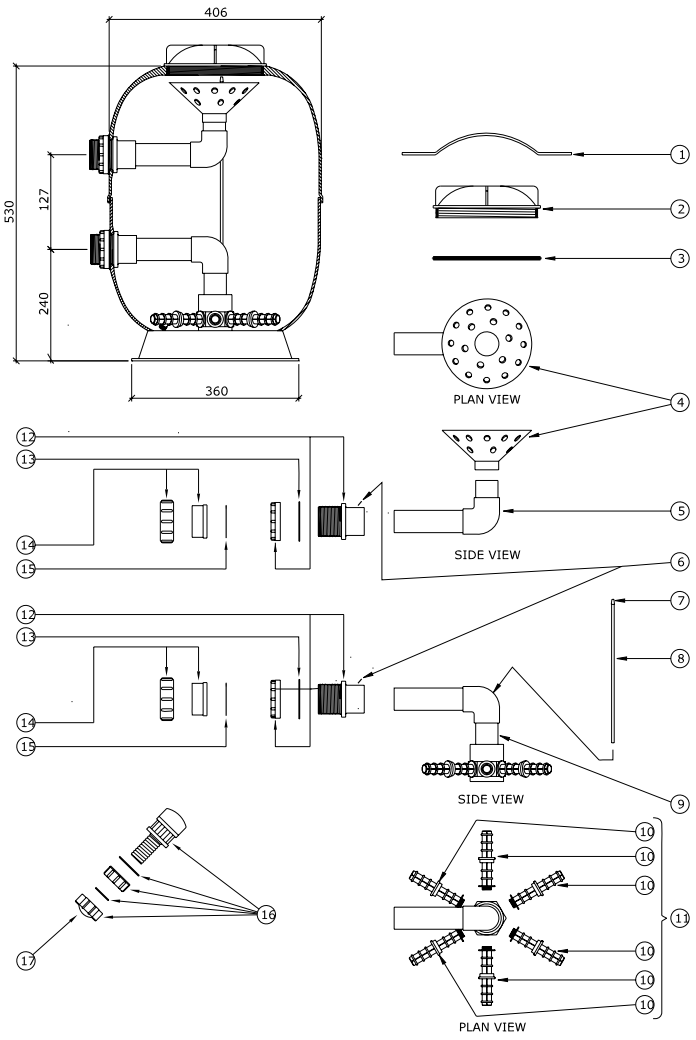

Part Number	Product Description	Diagram No.	LIST PRICE
6012 (1304A)	Lid removal tool (8" new type) Metal	1	£34.72
W22235	Lid removal tool Plastic		£13.25
6000 (6209292)	Lid (New type 8") Polycarbonate	2	£52.99
6011 (621053)	Lid 'O' Ring 8"	3	£8.99
620929	6" Polycarbonate Lid - drilled with two holes	2	£35.69
W02068	6" Lid 'O' Ring	3	£7.35
620221	Air relief tap (6" lid only)	n/s	£3.30
W02066	Rose distributor	4	£7.98
1366	1.5" Header (less rose)	5	£33.77
1671	3/4" Self tap screw (Pack of 10)	6	£4.79
W12045	Air bleed cap	7	£2.84
17101	18" Airbleed tube	8	£2.87
1365	18" - 1.5" Underdrain (less candles)	9	£32.28
6007 (W02985)	120mm Lateral (candle) (X 6)	10	£7.55
1393	Lateral (candle) set	11	£39.87
6013 (W02989 + W02271BLK)	1.5" Bulkhead fitting including nut	12	£18.21
6015 (1520)	1.5" Bulkhead gasket (Set of 2)	13	£8.36
6021 (W02981 + W02980)	1.5" Union adaptor including sleeve (set of 2)	14	£16.06
6004 (1522)	1.5" Union adaptor gasket (set of 2)	15	£5.08
6001 (W02026BLK)	Drain plug complete	16	£11.60
W02026ABLK	Drain plug cap only	17	£4.85
W04002PP	16"/18"/20" Base Stand	n/a	£23.96
	POST 2004		
6023 (W02209BLK + W02210BLK)	1.5" Union Adaptor nut and sleeve (set of 2)		£16.06
6026 (W02213)	1.5" Union adaptor 'O' Ring (set of 2)		£5.08

PLEASE NOTE: 1.1/2" Lacron filters manufactured pre 2004 will have union adaptors (Barrel Unions) with **flat gaskets**
1.1/2" Lacron filters manufactured post 2004 will have union adaptors (Barrel Unions) with 'O' rings

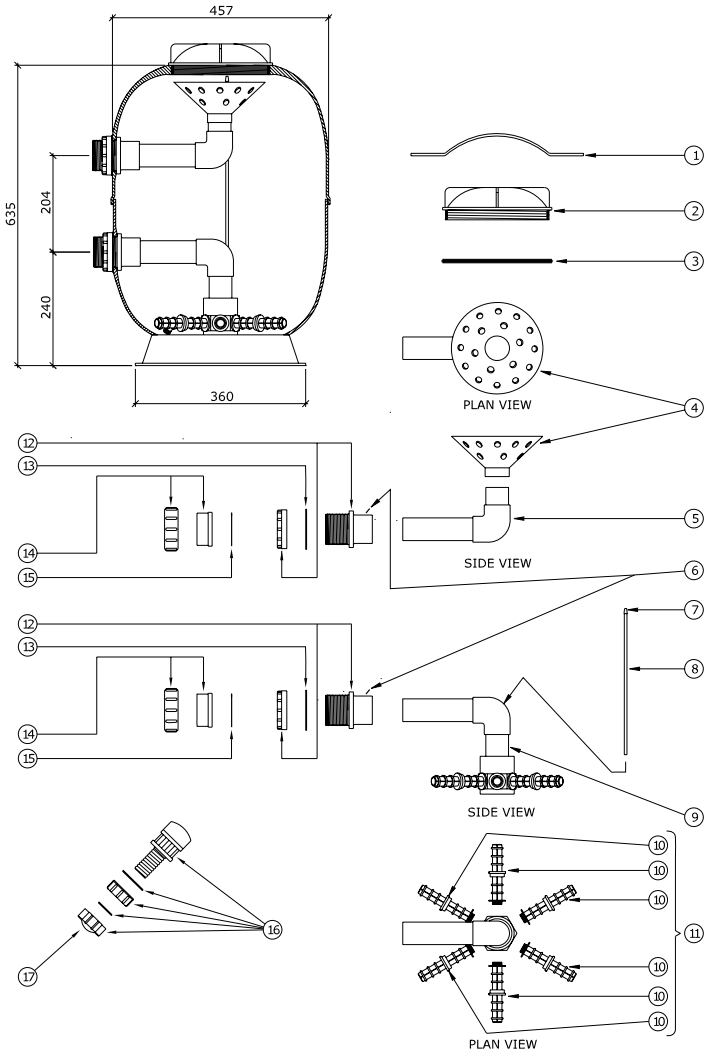

WATERCO
Water, the liquid of life

LSR - 20

Part Number	Product Description	Diagram No.	LIST PRICE
6012 (1304A)	Lid removal tool (8" new type) Metal	1	£34.72
W22235	Lid removal tool Plastic		£13.25
6000 (6209292)	Lid (New type 8") Polycarbonate	2	£52.99
6011 (621053)	Lid 'O' Ring 8"	3	£8.99
W02066	Rose distributor	4	£7.98
1366	1.5" Header (less rose)	5	£33.77
1671	3/4" Self tap screw (Pack of 10)	6	£4.79
W012045	Air bleed cap	7	£2.84
17101A	20" Airbleed tube	8	£2.87
1365A	20" - 1.5" Underdrain (less candles)	9	£32.28
6007	120mm Lateral (candle) (x 6)	10	£7.55
1393A	Lateral (candle) set	11	£46.65
6013 (W02989 + W02271BLK)	1.5" Bulkhead fitting including nut	12	£18.21
6015 (1520)	1.5" Bulkhead gasket (Set of 2)	13	£8.36
6021 (W02981 + W02980)	1.5" Union adaptor including sleeve (set of 2)	14	£16.06
6004 (1522)	1.5" Union adaptor gasket (set of 2)	15	£5.08
6001 (W02026BLK)	Drain plug complete	16	£11.60
W02026ABLK	Drain plug cap only	17	£4.85
W04002PP	16"/18"/20" Base Stand	n/a	£23.96
	POST 2004		
6023 (W02209BLK + W02210BLK)	1.5" Union Adaptor nut and sleeve (set of 2)		£16.06
6026 (W02213)	1.5" Union adaptor 'O' Ring (set of 2)		£5.08

PLEASE NOTE: 1.1/2" Lacron filters manufactured pre 2004 will have union adaptors (Barrel Unions) with **flat gaskets**
1.1/2" Lacron filters manufactured post 2004 will have union adaptors (Barrel Unions) with 'O' rings

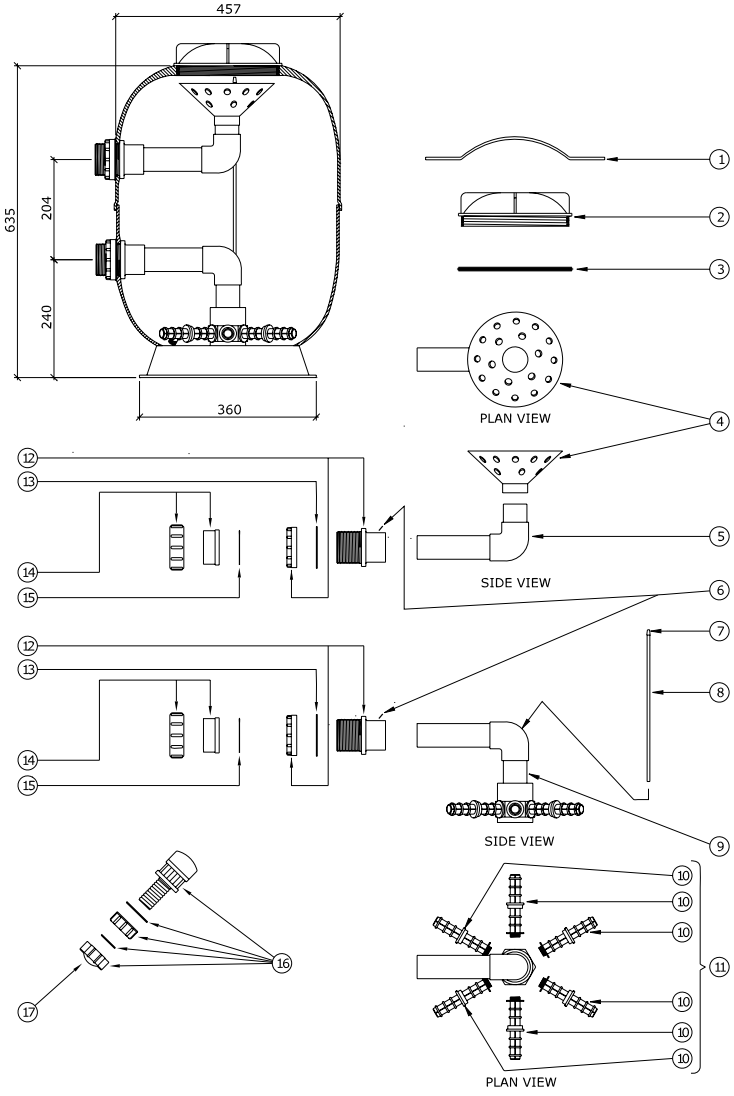

Part Number	Product Description	Diagram No.	LIST PRICE
6012 (1304A)	LID REMOVAL TOOL (8" NEW TYPE) METAL	1	£34.72
W22235	LID REMOVAL TOOL PLASTIC		£13.25
6000 (6209292)	LACRON LID (POLYCARBONATE 8" NEW TYPE)	2	£52.99
6011 (621053)	LACRON LID 'O' RING 8”	3	£8.99
W02066	ROSE DISTRIBUTOR	4	£7.98
1368	1.5" HEADER (LESS ROSE)	5	£33.77
1671	3/4" SELF TAP SCREW (pack of 10)	6	£4.79
1367	24" - 1.5" UNDERDRAIN LESS CANDLES	7	£36.08
17102	24" LACRON AIRBLEED	8	£3.07
W12045	AIR BLEED CAP	9	£2.84
6007 (W02985)	120mm LATERAL (CANDLE) (X 4)	10	£7.55
6008 (W02984 + W02991)	180mm LATERAL (CANDLE) (X 6)	11	£8.36
1394	LATERAL (CANDLE) SET	12	£71.56
6013 (W02989 + W02271BLK)	1.5" BULKHEAD FITTING (PLUS NUT)	13	£18.21
6015 (1520)	1.5" BULKHEAD GASKET (set of 2)	14	£8.36
6021 (W02981 + W02980)	1.5" ADAPTOR UNION (PLUS SLEEVE) (set of 2)	15	£16.06
6004 (1522)	1.5" ADAPTOR GASKET (set of 2)	16	£5.08
6001 (W02026BLK)	DRAIN PLUG COMPLETE	17	£11.60
W02026ABLK	DRAIN PLUG CAP	18	£4.85
W04003PP	24” Base Stand	n/a	£23.96
	POST 2004		
6023 (W02209BLK + W02210BLK)	1.5” Union Adaptor nut and sleeve (set of 2)		£16.06
6026 (W02213)	1.5” Union adaptor ‘O’ Ring (set of 2)		£5.08

PLEASE NOTE: 1.1/2” Lacron filters manufactured pre 2004 will have union adaptors (Barrel Unions) with **flat gaskets**
1.1/2” Lacron filters manufactured post 2004 will have union adaptors (Barrel Unions) with ‘O’ rings

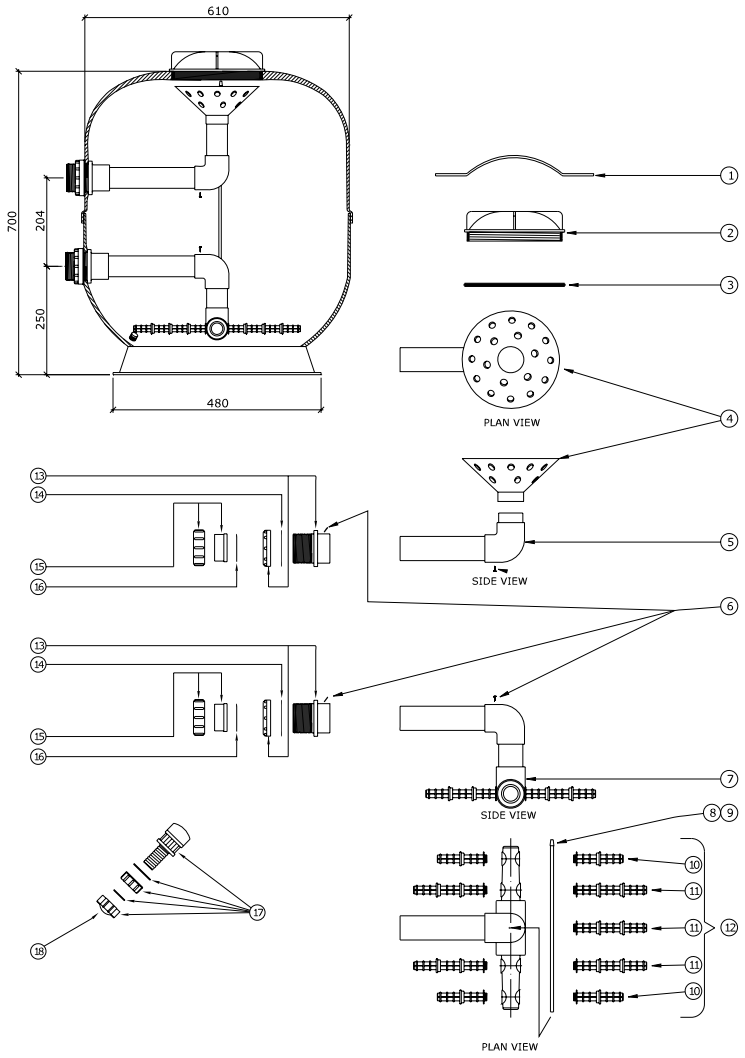

WATERCO
Water, the liquid of life

LSR - 30

Part Number	Product Description	Diagram No.	LIST PRICE
6012 (1304A)	LACRON LID REMOVAL TOOL (8" NEW TYPE)	1	£34.72
W22235	LID REMOVAL TOOL PLASTIC		£13.25
6000 (6209292)	LACRON LID (POLYCARBONATE 8" NEW TYPE)	2	£52.99
6011 (621053)	LACRON LID 'O' RING 8"	3	£8.99
W02066	ROSE DISTRIBUTOR	4	£7.98
1671	3/4" SELF TAP SCREW (pack of 10)	5	£4.79
1370	2" HEADER (LESS ROSE)	6	£55.05
W12045	AIR BLEED CAP	7	£2.84
17103	30" LACRON AIRBLEED	8	£4.17
6007 (W02985)	120mm LATERAL (CANDLE) (X 4)	9	£7.55
6008 (W02984 + W02991)	180mm LATERAL (CANDLE) (X 4)	10	£8.36
6009 (W02991 + W02985)	240mm LATERAL (CANDLE) (X 6)	11	£9.09
1395	LATERAL (CANDLE) SET	12	£105.71
1369	30" - 2" UNDERDRAIN LESS CANDLES	13	£63.00
6014 (W12065)	2" BULKHEAD FITTING (PLUS NUT)	14	£21.73
6016 (1521)	2" BULKHEAD GASKET (set of 2)	15	£21.27
6022 (W02983 + W02982)	2" ADAPTOR UNION (PLUS SLEEVE) (set of 2)	16	£20.34
6005 (1523)	2" ADAPTOR GASKET (set of 2)	17	£8.36
6001 (W02026BLK)	DRAIN PLUG COMPLETE	18	£11.60
W02026ABLK	DRAIN PLUG CAP	19	£4.85
W04004PP	30" Base Stand	n/a	£27.42

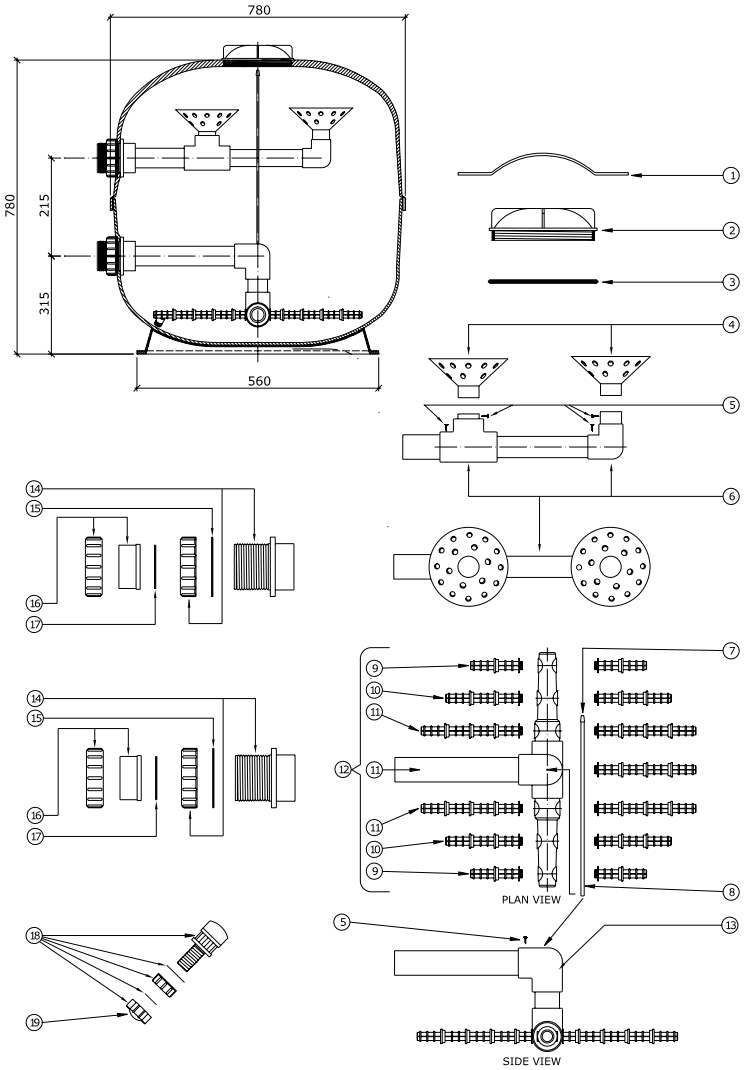

Part Number	Product Description	Diagram No.	LIST PRICE
W02066	ROSE DISTRIBUTOR	5	£7.98
1671	3/4" SELF TAP SCREW (pack of 10)	5	£4.79
1370	2" HEADER (LESS ROSE)	6	£55.05
W12045	AIR BLEED CAP	7	£2.84
17103	30" LACRON AIRBLEED	8	£3.98
6007 (W02985)	120mm LATERAL (CANDLE) (X 4)	9	£7.55
6008 (W02984 + W02991)	180mm LATERAL (CANDLE) (X 4)	10	£8.36
6009 (W02991 + W02985)	240mm LATERAL (CANDLE) (X 12)	11	£9.09
1395A	LATERAL (CANDLE) SET	13	£105.71
1388B	2" UNDERDRAIN LESS CANDLES	14	£174.96
6014 (W12065)	2" BULKHEAD FITTING (PLUS NUT)	15	£21.73
6016 (1521)	2" BULKHEAD GASKET (SET OF 2)	16	£21.27
1524D	36" - 2" BULKHEAD FITTING (TOP)	17	£46.66
1524E	36" - 2" BULKHEAD FITTING (BOTTOM)	17A	£44.20
6022 (W02983 + W02982)	2" ADAPTOR UNION (PLUS SLEEVE)	18	£20.34
6005 (1523)	2" ADAPTOR GASKET (SET OF 2)	19	£8.36
6001 (W02026BLK)	DRAIN PLUG COMPLETE	20	£11.60
W02026ABLK	DRAIN PLUG CAP	21	£4.85
W04854	36” Base Stand	n/a	£28.61
For filters supplied prior to	Clamp Style Lid		
6012 (1304A)	LACRON LID REMOVAL TOOL (8” NEW TYPE)	1	£34.72
6000 (6209292)	LACRON LID (POLYCARBONATE 8” NEW TYPE)	2	£52.99
6011 (1316)	LACRON LID ‘O’ RING	3	£8.99
	POST 2007 ‘CLAMP LID’		
W12076	NYLON AIR RELIEF TAP + ‘O’ RING		£8.41
W12248	LID RETAINING CLAMP c/w SCREW & NUT		£42.00
1993	SMALL OVAL LID O RING		£11.38
W12135	SMALL OVAL LID		£91.85

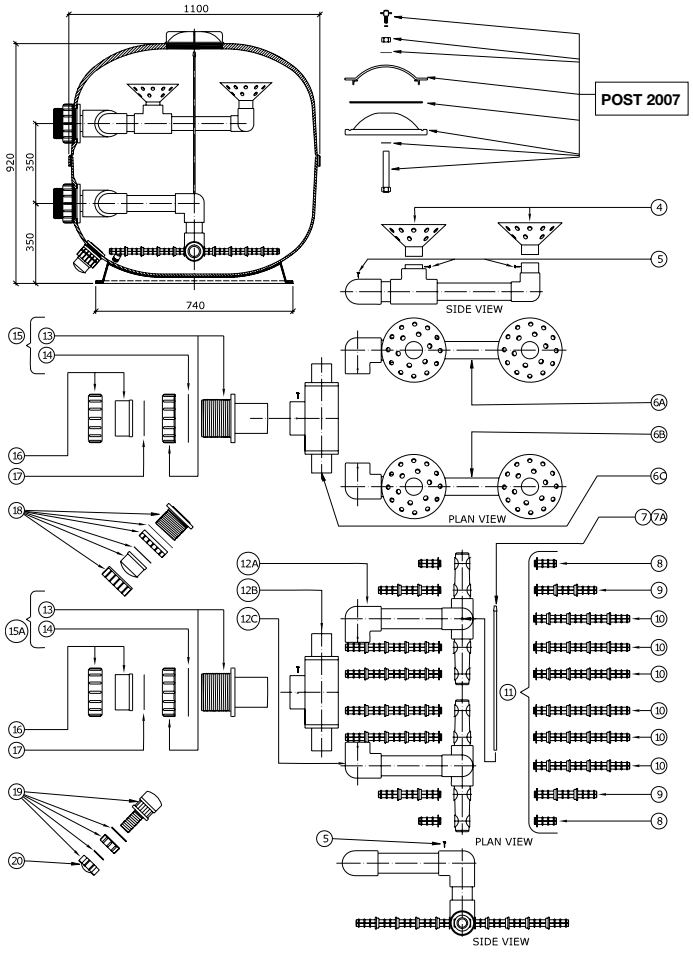

WATERCO
Water, the liquid of life

LSC - 36 - 3

Part Number	Product Description	Diagram No.	LIST PRICE
1671	3/4" SELF TAP SCREW (pack of 10)	5	£4.79
W02289	AIR RELIEF TUBE SCREEN		£2.84
W04058BLK	40mm DRAIN PLUG COMPLETE	20	£11.60
17104 (W02550)	36" LACRON AIRBLEED (740 mm)	8	£4.12
1388A (W12292)	36" - 3" HEADER (LESS ROSE)	6	£172.69
W02066	ROSE DISTRIBUTOR (FUNNEL FOR SM)	4	£7.98
W02249	O RING FOR HALF UNION	19	£10.15
634080BLK	HALF UNION 3" c/w O RING		£43.70
6017 (W02252B + W2254B)	BULKHEAD 3" BULKHEAD FITTING (PLUS NUT)	15 + 16	£34.14
1388 (W12295)	UNDERDRAIN COMPLETE LESS CANDLES	14	£180.28
6007 (W02985)	120mm LATERAL (CANDLE) (X 4)	9	£7.55
6008 (W02984 + W02991)	180mm LATERAL (CANDLE) (X 4)	10	£8.36
6009 (W02991 + W02985)	240mm LATERAL (CANDLE) (X 4)	11	£9.09
6010 (W02991 + W02986)	280mm LATERAL (CANDLE) (X 4)	12	£10.13
85251	GULF STREAM PLUG		£0.75
W04854	36" Base Stand	n/a	£28.61
6018 (W02253BLK / W02255BLK / W02255EBLK)	3"/90mm ADAPTOR UNION (PLUS SLEEVE) **'O' Ring type**	18	£28.12
6020 (1559)	3"/90mm ADAPTOR GASKET (set of 2) **Pre 2007**	19	£10.25
6020A	3"/90mm ADAPTOR 'O' RING (set of 2) **Post 2007**	19	£10.15
For filters supplied prior to Clamp Style Lid			
6012 (1304A)	LACRON LID REMOVAL TOOL (8" NEW TYPE)	1	£34.72
6000 (6209292)	LACRON LID (POLYCARBONATE 8" NEW TYPE)	2	£52.99
6011 (1316)	LACRON LID 'O' RING	3	£8.99
	POST 2007 'CLAMP LID'		
W12076	NYLON AIR RELIEF TAP + 'O' RING		£8.41
W12248	LID RETAINING CLAMP c/w SCREW & NUT		£42.00
1993	SMALL OVAL LID O RING		£11.38
W12135	SMALL OVAL LID		£91.85

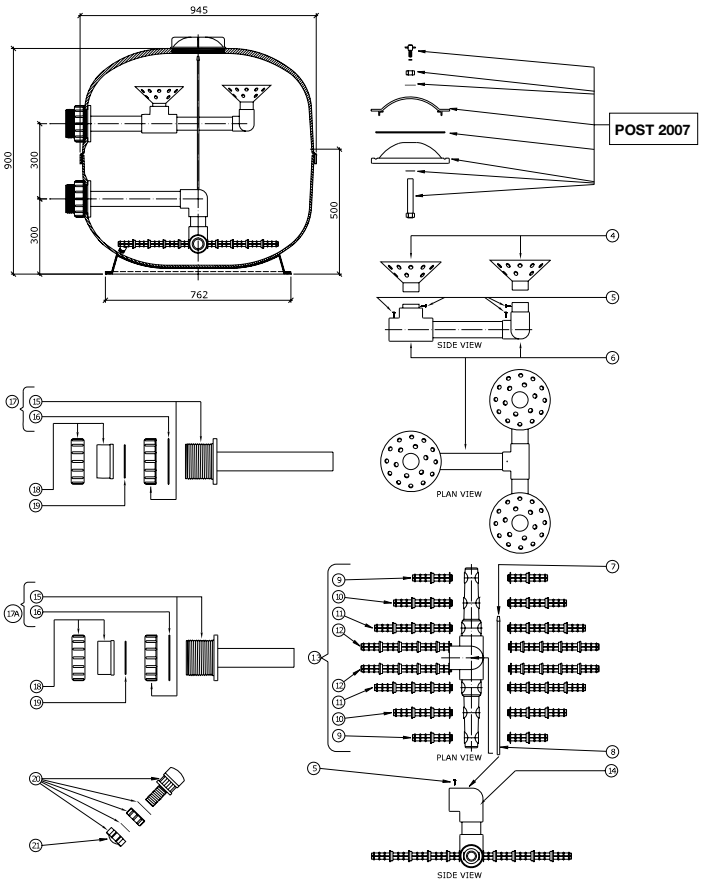

Part Number	Product Description	Diagram No.	LIST PRICE
85251	Gulf stream Plug		£0.75
W02066	ROSE DISTRIBUTOR	4	£7.98
1671	3/4" SELF TAP SCREW (pack of 10)	5	£4.79
1372	42" LHS HEADER (LESS ROSE)	6A	£70.60
1372A	42" RHS HEADER (LESS ROSE)	6B	£70.60
1372B	42" MAIN HEADER 'T'	6C	£99.45
W12045	AIR BLEED CAP	7	£2.84
17105	42" LACRON AIRBLEED	7A	£5.38
6006 (W02984)	60mm LATERAL (CANDLE) (X 4)	8	£7.00
6008 (W02984 + W02991)	180mm LATERAL (CANDLE) (X 4)	9	£8.36
6010 (W02991 + W02986)	280mm LATERAL (CANDLE) (X 12)	10	£10.13
1396	LATERAL (CANDLE) SET	11	£166.80
1371	42" LHS UNDERDRAIN (LESS CANDLES)	12A	£84.63
1371B	42" MAIN UNDERDRAIN 'T' & CON PIPE	12B	£99.45
1371A	42" RHS UNDERDRAIN (LESS CANDLES)	12C	£84.63
6017 (W02252B + W2254B)	3" BULKHEAD FITTING (PLUS NUT)	13	£34.14
6019 (1560)	3" BULKHEAD GASKET (set of 2)	14	£12.16
1525A	42" - 3" BULKHEAD FITTING (TOP)	15	£40.52
1525B	42" - 3" BULKHEAD FITTING (BOTTOM)	15A	£41.74
6018 (W02253BLK / W02255BLK / W02255EBLK)	3"/90mm ADAPTOR UNION (PLUS SLEEVE) **'O' Ring type**	16	£28.12
6020 (1559)	3"/90mm ADAPTOR GASKET (set of 2) **Pre 2007**	17	£10.25
6020A	3"/90mm ADAPTOR 'O' RING (set of 2) **Post 2007**	17	£10.15
W04058BLK	1.5" SAND DRAIN COMPLETE	18	£58.22
6001 (W02026BLK)	DRAIN PLUG COMPLETE	19	£11.60
W02026ABLK	DRAIN PLUG CAP	20	£4.85
W04846	42" Base Stand	n/a	£29.80
For filters supplied prior to	Clamp Style Lid		
6012 (1304A)	LACRON LID REMOVAL TOOL (8" NEW TYPE)	1	£34.72
6000 (6209292)	LACRON LID (POLYCARBONATE 8" NEW TYPE)	2	£52.99
6011 (1316)	LACRON LID 'O' RING	3	£8.99
	POST 2007 'CLAMP LID'		
W12076	NYLON AIR RELIEF TAP + 'O' RING		£8.41
W12248	LID RETAINING CLAMP c/w SCREW & NUT		£42.00
1993	SMALL OVAL LID O RING		£11.38
W12135	SMALL OVAL LID		£91.85

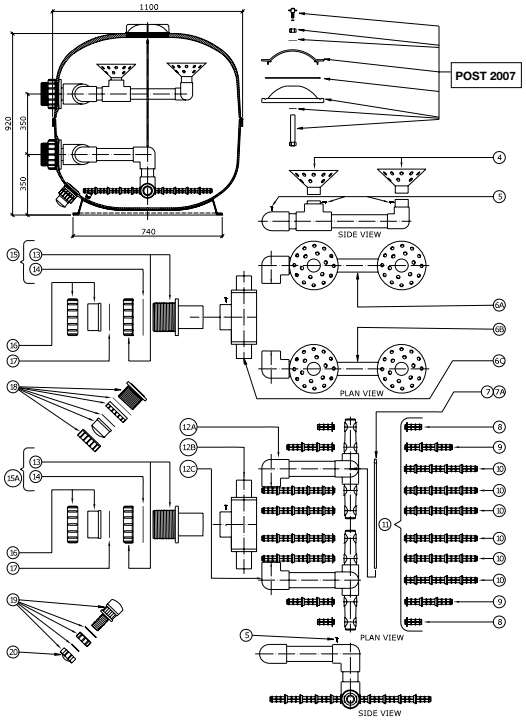

WATERCO
Water, the liquid of life

LSC - 48

Part Number	Product Description	Diagram No.	LIST PRICE
W12076	NYLON AIR RELIEF TAP + 'O' RING	1	£8.41
W12248	SMALL OVAL LID RETAINING CLAMP c/w SCREW & NUT	3	£42.00
1993 (W12284)	SMALL OVAL LID 'O' RING	4	£11.38
W12135	SMALL OVAL LID	5	£91.85
W02066	ROSE DISTRIBUTOR	6	£7.98
17401	48" LHS HEADER (LESS ROSE)	7	£106.25
17403	48" MAIN HEADER PIPE SUPPORT 'T'	8	£28.47
17402	48" RHS HEADER (LESS ROSE)	9	£106.25
17404	48" MAIN HEADER PIPE INLET 'T'	10	£111.96
6006 (W02984)	60mm LATERAL (CANDLE) (X 4)	11	£7.00
6007 (W02985)	120mm LATERAL (CANDLE) (X 4)	12	£7.55
6008 (W02984 + W02991)	180mm LATERAL (CANDLE) (X 24)	13	£8.36
6009 (W02991 + W02985)	240mm LATERAL (CANDLE) 9 X 8)	14	£9.01
1396A	48" LACRON LATERAL (CANDLE) SET	15	£166.80
W12045	AIR BLEED CAP	16	£2.84
17106	48" LACRON AIRBLEED (set of 2)	17	£9.50
17405	48" LHS UNDERDRAIN (LESS CANDLES)	18	£104.39
17407	48" MAIN UNDERDRAIN 'T' & CON PIPE	19	£130.94
17406	48" RHS UNDERDRAIN (LESS CANDLES)	20	£104.39
6017 (W02252B + W2254B)	3" BULKHEAD FITTING (PLUS NUT)	21	£34.14
6019 (1560)	3" BULKHEAD GASKET (set of 2)	22	£12.16
1524C	48" - 3" BULKHEAD FITTING INC PIPE	23	£46.50
6018 (W02253BLK / W02255BLK / W02255EBLK)	3"/90mm ADAPTOR UNION (PLUS SLEEVE) **'O' Ring type**	18	£28.12
6020 (1559)	3"/90mm ADAPTOR GASKET (set of 2) **Pre 2007**	19	£10.25
6020A	3"/90mm ADAPTOR 'O' RING (set of 2) **Post 2007**	19	£10.15
W04058BLK	1.5" SAND DRAIN COMPLETE	26	£58.22
6001 (W02026BLK)	DRAIN PLUG COMPLETE	27	£11.60
W02026ABLK	DRAIN PLUG CAP	28	£4.85
1671	3/4" SELF TAP SCREW (pack of 10)	29	£4.79

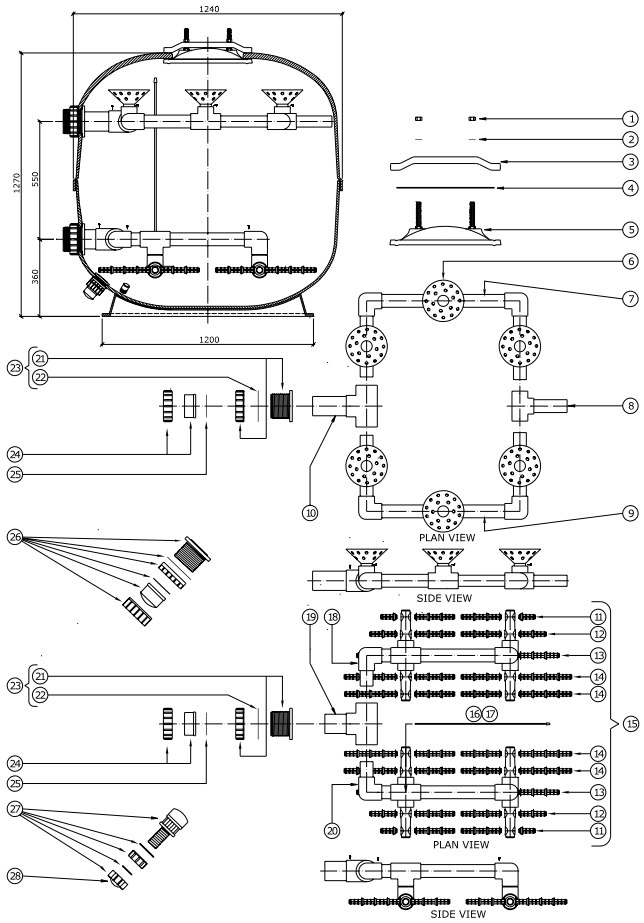

Part Number	Product Description	Diagram No.	LIST PRICE
6012 (1304A)	Lacron Lid removal tool (new type - 8")	1	£34.72
6000 (6209292)	Lacron Lid (new type 8")	2	£52.99
6011 (1316)	Lacron Lid 'O' ring	3	£8.99
W02066	Rose distributor	4	£7.98
17160	18" x 1 1/2" Header (less rose)	5	£30.39
W12045	Air bleed cap (old style)	6	£2.84
17130	18" DBF airbleed tube	7	£9.21
1365B	18" Underdrain (less candles)	8	£39.29
1318 (W12231)	113mm Heavy duty Lateral (candle) (X 6)	9	£9.50
1393B	18" DBF Lateral (candle) set	10	£46.66
6013 (W02989 + W02271BLK)	1 1/2" Bulkhead fitting including nut	11	£18.21
6015 (1520)	1 1/2" Bulkhead gasket (set of two)	12	£8.36
6021 (W02981 + W02980)	1 1/2" Union adaptor & nut (set of 2)	13	£16.06
6004 (1522)	1 1/2" Union adaptosr gasket (set of 2)	14	£5.08
W04058BLK	1 1/2" Sand drain complete	15	£58.22
6001 (W02026BLK)	Drain plug complete	16	£11.60
W02026ABLK	Drain plug cap only	17	£4.85
1671	3/4" S/S self tapping screw (set of 10)	18	£4.79
W12050	Side Hatch Cover		£55.63
1315	Side Hatch Cover 'O' Ring		£8.39
	POST 2004		
6023 (W02209BLK+W022180BLK)	1.5 Union Adaptor Nut and Sleeve (Set of 2)		£16.06
6026 (W02213)	1.5" Union adaptor 'O' Ring (set of 2)		£5.08
CLAMP LID			
W12076	NYLON AIR RELIEF TAP + 'O' RING		£8.41
W12248	LID RETAINING CLAMP c/w SCREW & NUT		£42.00
1993	SMALL OVAL LID O RING		£11.38
W12135	SMALL OVAL LID		£91.85

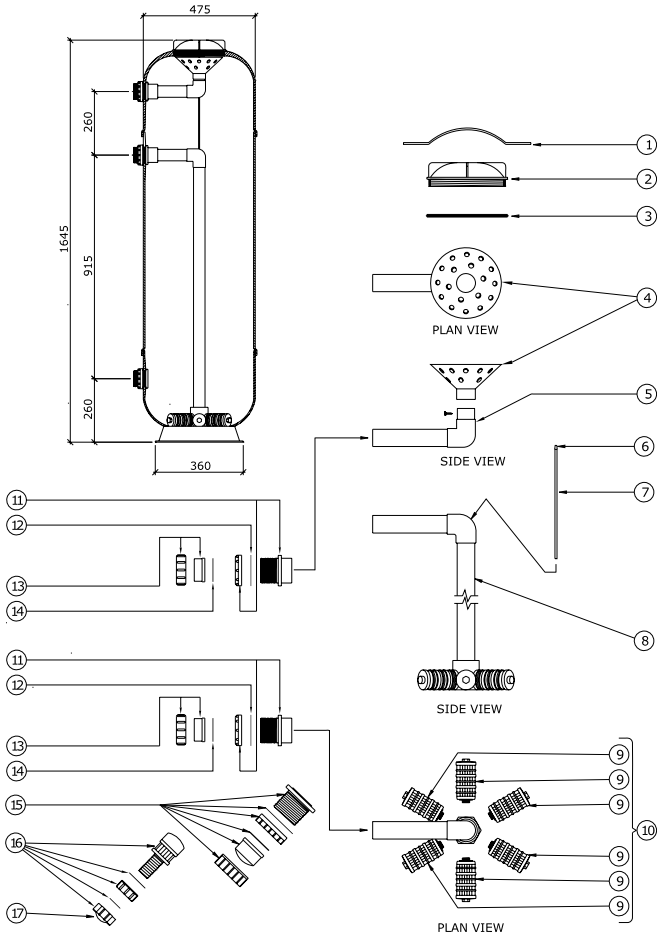

WATERCO
Water, the liquid of life

DBF - 24

Part Number	Product Description	Diagram No.	LIST PRICE
6012 (1304A)	Lacron Lid removal tool (new type - 8”)	1	£34.72
6000 (6209292)	Lacron Lid (new type 8”)	2	£52.99
6011 (1316)	Lacron Lid ‘O’ ring	3	£8.99
W02066	Rose distributor	4	£7.98
1368	24” - 2” Header (less rose)	5	£33.76
1318	113mm Heavy duty Lateral (candle) (X 4)	6	£9.50
1319	206mm Heavy duty lateral (candle) (X 6)	7	£15.18
1394B	24” DBF - Lateral (candle) set	8	£71.56
W12045	Air bleed cap (old type)	9	£2.84
17131	Airbleed tube	10	£11.36
1382	1.5” Underdrain (less candles)	11	£100.58
6014A (W12065 + 1472)	2” Bulkhead fitting including nut	12	£21.73
6016 (1521)	2” Bulkhead gasket (set of two)	13	£21.27
6022 (W02983 + W02982)	2” Union adaptor inc sleeve (set of 2)	14	£20.34
6005 (1523)	2” Union adaptor gasket (set of 2)	15	£8.36
W04058BLK	1.5” Sand drain complete	16	£58.22
6001 (W02026BLK)	Drain plug complete	17	£11.60
W02026ABLK	Drain plug cap only	18	£4.85
1671	3/4” S/S self tapping screw (set of 10)	19	£4.79
W12050	10 Hole side hatch cover	–	£55.63
1315	10 Hole Cover ‘O’ Ring	–	£8.39
CLAMP LID			
W12076	NYLON AIR RELIEF TAP + ‘O’ RING		£8.41
W12248	LID RETAINING CLAMP c/w SCREW & NUT		£42.00
1993	SMALL OVAL LID O RING		£11.38
W12135	SMALL OVAL LID		£91.85

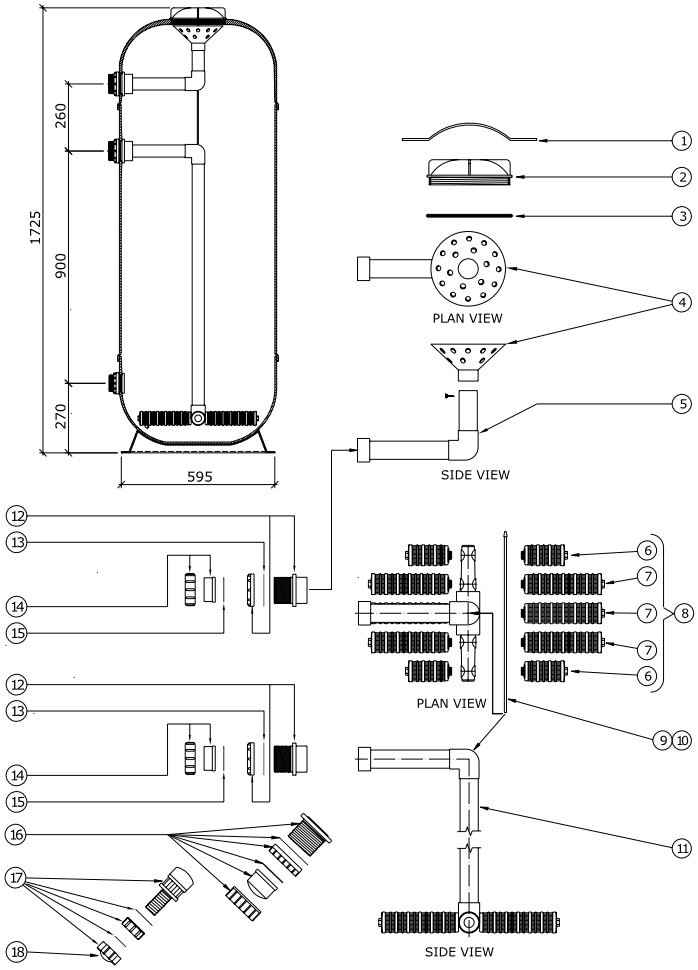

Part Number	Product Description	Diagram No.	LIST PRICE
6012 (1304A)	Lacron Lid removal tool (new type - 8")	1	£34.72
6000 (6209292)	Lacron Lid (new type 8")	2	£52.99
6011 (1316)	Lacron Lid 'O' ring	3	£8.99
W02066	Rose distributor (each)	4	£7.98
1370	30" - 2" Header (less rose)	5	£55.05
1318	113mm Heavy duty Lateral (candle) (X 4)	6	£9.50
1319	206mm Heavy duty lateral (candle) (X 4)	7	£15.18
1320	238mm Heavy duty lateral (candle) (X 6)	8	£17.09
1395B	30 x 2" DBF - Lateral (candle) set	9	£181.01
W12045	Air bleed cap (old type)	10	£2.84
17131	30" DBF airbleed tube	11	£11.36
1383	2" Underdrain (less candles)	12	£120.32
6014	2" Bulkhead fitting including nut	13	£21.73
6016 (1521)	2" Bulkhead gasket (set of two)	14	£21.27
6022 (W02983 + W02982)	2" Union adaptor inc sleeve (set of 2)	15	£20.34
6005 (1523)	2" Union adapter gasket (set of 2)	16	£8.36
W04058BLK	1½" Sand drain complete	17	£58.22
6001 (W02026BLK)	Drain plug complete	18	£11.60
W02026ABLK	Drain plug cap only	19	£4.85
1671	3/4" S/S self tapping screw (set of 10)	–	£4.79
W12050	10 Hole side hatch cover	–	£55.63
1315	10 Hole Cover 'O' Ring	–	£8.39

CLAMP LID			
W12076	NYLON AIR RELIEF TAP + 'O' RING		£8.41
W12248	LID RETAINING CLAMP c/w SCREW & NUT		£42.00
1993	SMALL OVAL LID O RING		£11.38
W12135	SMALL OVAL LID		£91.85

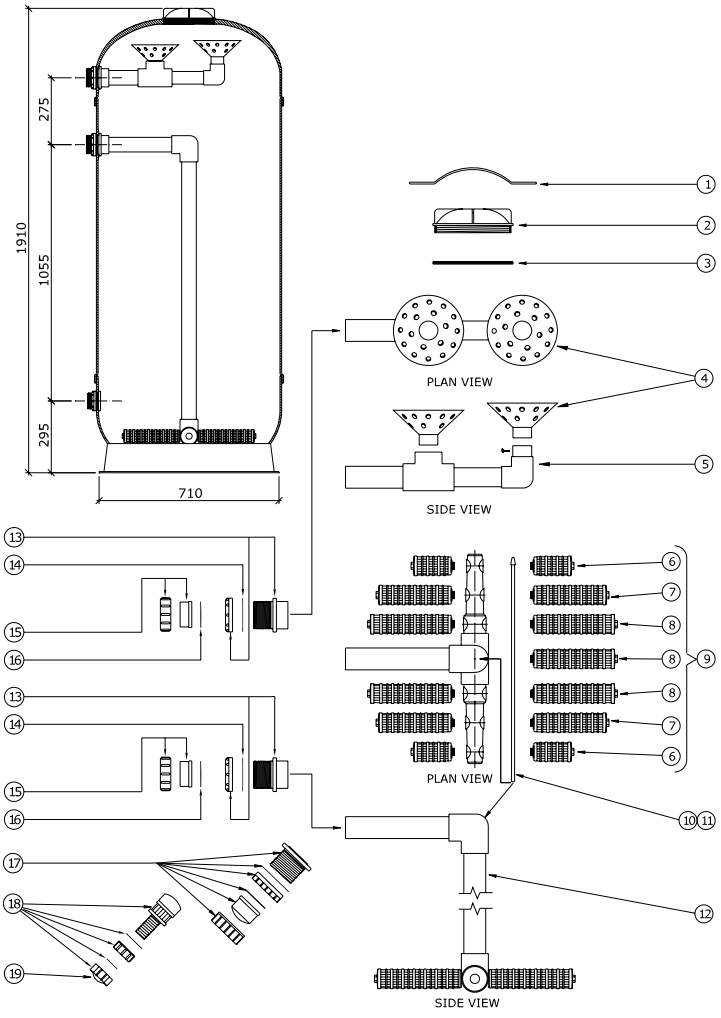

WATERCO
Water, the liquid of life

DBF - 36

Part Number	Product Description	Diagram No.	LIST PRICE
W12248	9” x 6” Clamp	1	£42.01
W12135	9” x 6” Lid Oval	1	£91.85
W02933	O-ring G225	1	£11.38
W02066	Funnel	3	£7.98
12555BLK	Reducing bush 2” x 1½”	3	£6.40
121350	Elbow 50mm	2	£2.84
12566	Reducing Bush 65 x 50	4	£6.40
12588	Reducing bush 3” x 2½”	2	£6.40
121962	Tee 65mm	1	£4.24
W12231	133mm Heavy Duty Lateral	4	£10.81
W12232	206mm Heavy Duty Lateral	4	£15.18
W12233	238mm Heavy Duty Lateral	4	£17.09
W12229	268mm Heavy Duty Lateral	4	£19.02
W02289	Air relief tube screen	1	£2.89
85251	Gulf stream plug	1	£0.64
W02558	Air bleed tube	1.3m	£12.89
W12297	Tapped Tee 2½”	1	£15.05
W12089	LCT extension 3 hole	2	£1.95
121365	Elbow 65mm	1	£2.92
W12955	Bulkhead Body + Lock Nut 3” Blk	2	£34.14
W02250	Gasket Bulkhead Body 3”	2	£6.07
W12954	B/U Lock But + Plain End 3” Black	2	£28.11
W02249	)-ring 3’ B/U	2	£6.08
W04058BLK	Drain Plug Complete 40mm Complete	1	£58.23
121950	Tee 50mm	1	£4.08
W12956	Black Cap Nut M12	18	£21.23
W12310	Large Oval Hatch 18-Hole	1	£151.20
W12300	Gasket Oval 18-Hole	1	£26.82
W22173	Gland PG7 (3 - 6.5)	1	£5.51

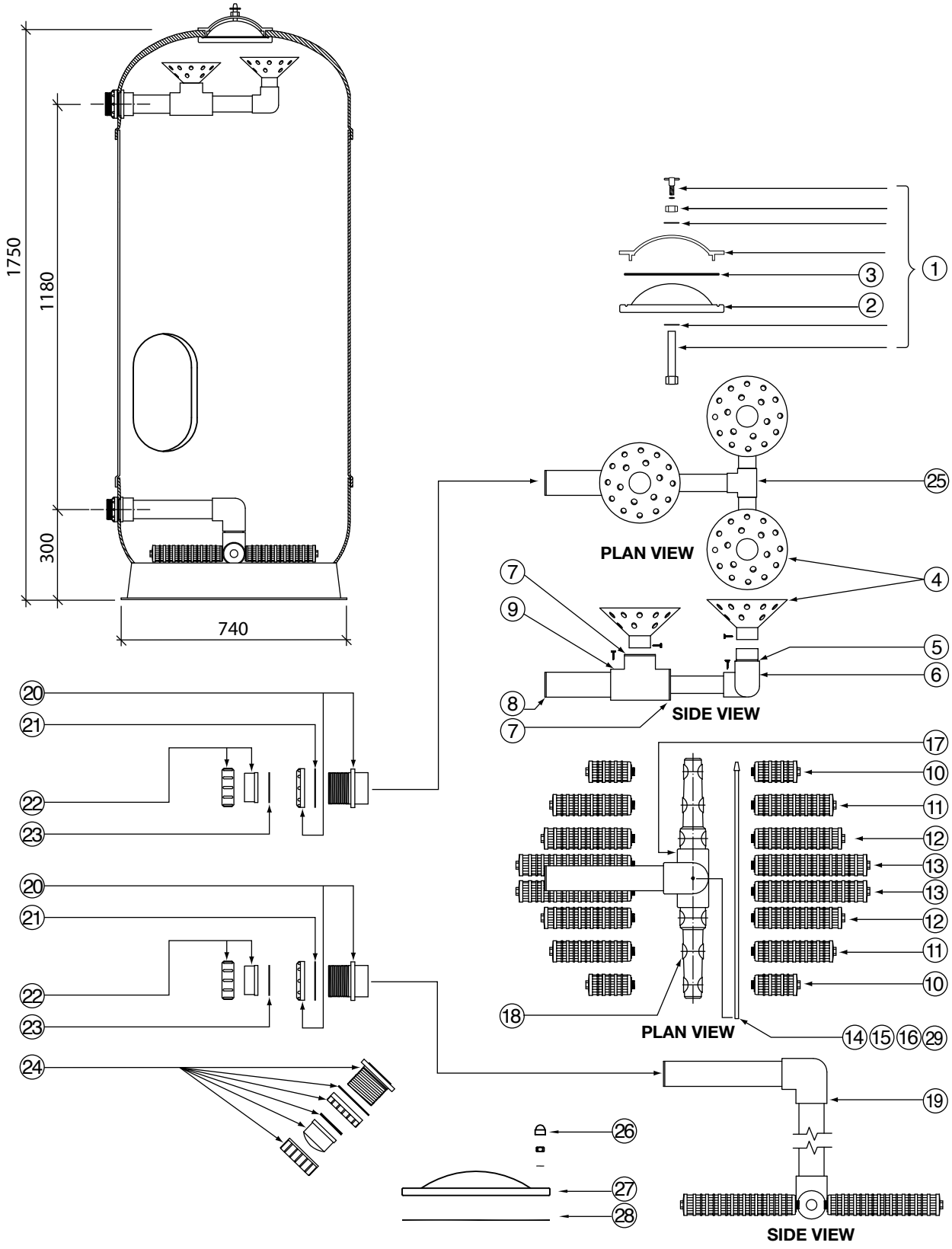

WATERCO
Water, the liquid of life

DBF - 42

Part Number	Product Description	Diagram No.	LIST PRICE
6012 (1304A)	Lacron Lid removal tool (new type - 8”)	1	£34.72
6000 (6209292)	Lacron Lid (new type 8”)	2	£52.99
6011 (1316)	Lacron Lid ‘O’ ring	3	£8.99
W02066	Rose distributor (each)	4	£7.98
1372	42” LHS - Header (less rose)	5	£70.60
1372A	42” RHS - Header (less rose)	6	£70.60
1372B	42” Main header ‘T’ (inc connect pipe)	7	£99.45
W12045	Air bleed cap (old style)	8	£2.84
17133	Air bleed tube	9	£12.88
1274	82mm Heavy duty Lateral (candle) (X 4)	10	£8.55
1320	238m Heavy duty lateral (candle) (X 4)	11	£17.09
1277	300mm Heavy duty lateral (candle) (X 12)	12	£19.38
1396B	42” DBF - Lateral (candle) set	13	£174.89
1371	42” LHS Underdrain (less candles)	14	£84.63
1371A	42” RHS Underdrain (less candles)	15	£84.63
1371B	42” Main underdrain ‘T’ (inc conect pipe)	16	£99.45
6017 (W02252B + W2254B)	3” Bulkhead fitting including nut	17	£34.14
6019 (1560)	3” Bulkhead gasket (set of two)	18	£12.16
1525A	42” Bulkhead fitting (top)	19	£40.52
1525B	42” Bulkhead fitting (bottom)	20	£41.74
6018 (W02253BLK /W02255BLK /W02255EBLK)	3” Union adaptor inc sleeve (each) ‘O’ Ring type	21	£28.12
6020 (1559)	3” Union adaptor gasket (set of 2) **Pre 2007**	22	£10.25
6020A	3”/90mm ADAPTOR ‘O’ RING (Set of 2) **POST 2007**	–	£10.15
W04058BLK	1½” Sand drain complete	23	£58.22
6001 (W02026BLK)	Drain plug complete	24	£11.60
W02026ABLK	Drain plug cap only	25	£4.85
1671	3/4” S/S self tapping screw (set of 10)	–	£4.79
	POST 2007 ‘CLAMP LID’		
W12076	NYLON AIR RELIEF TAP + ‘O’ RING		£8.41
W12248	LID RETAINING CLAMP c/w SCREW & NUT		£42.00
1993	SMALL OVAL LID O RING		£11.38
W12135	SMALL OVAL LID		£91.85

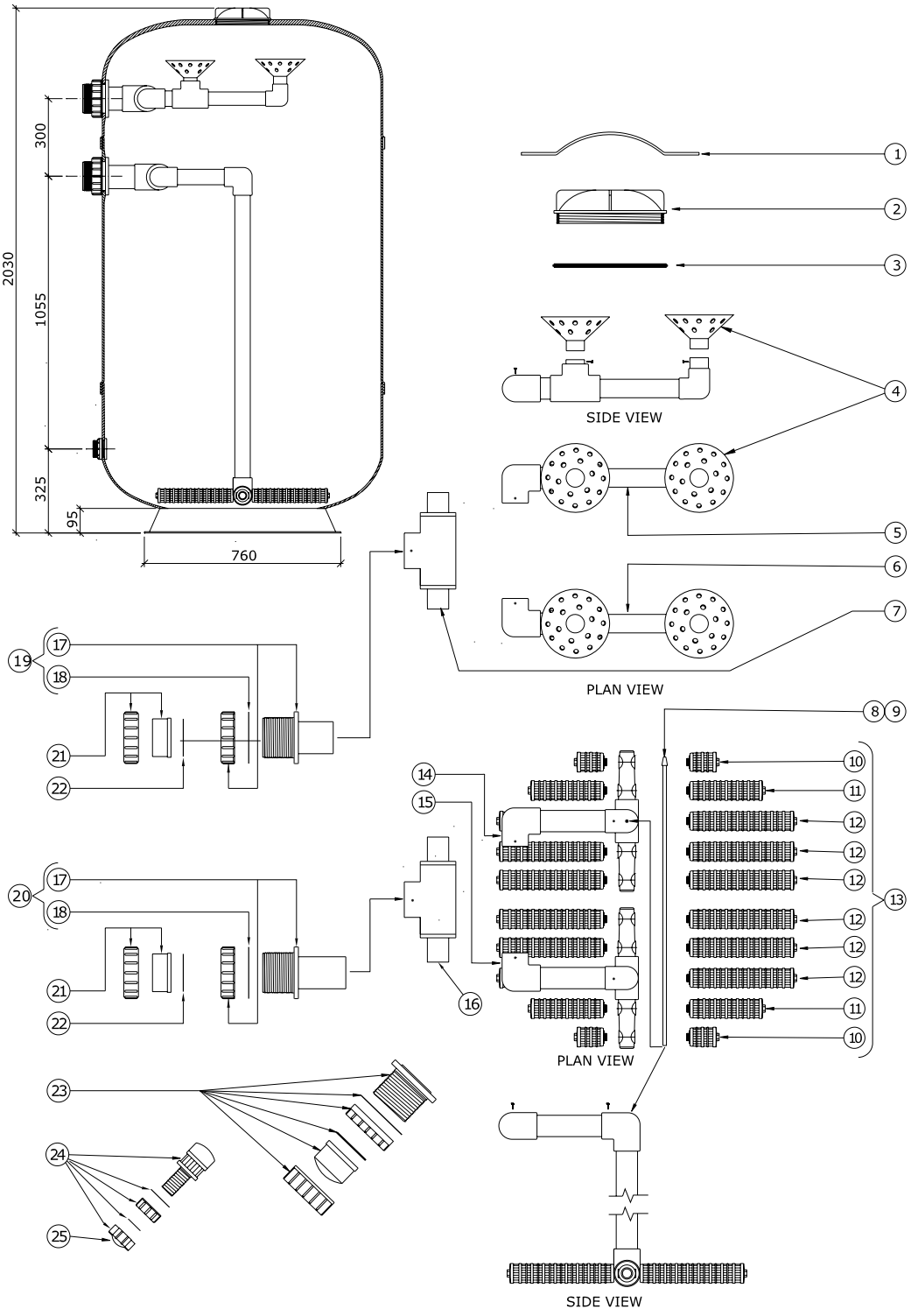

WATERCO
Water, the liquid of life

DBK - 24

Part Number	Product Description	Diagram No.	LIST PRICE
W12076	NYLON AIR RELIEF TAP + 'O' RING		£8.41
W12248	SMALL OVAL LID RETAINING CLAMP c/w SCREW & NUT		£42.00
1993	SMALL OVAL LID 'O' RING		£11.38
W12135	SMALL OVAL LID		£91.85
W02066	ROSE DISTRIBUTOR	6	£7.98
1671	3/4" SELF TAPPING SCREW (pack of 10)	7	£4.79
1405A	DBK 24 HEADER LESS ROSE	8	£67.23
6014A (W12065 + 1472)	2" BULKHEAD FITTING (PLUS NUT)	9	£21.73
6016 (1521)	2" BULKHEAD GASKET (set of 2)	10	£21.27
6005 (1523)	2" UNION ADAPTOR GASKET (set of 2)	11	£8.36
6022 (W02983 + W02982)	2" UNION ADAPTOR (PLUS SLEEVE) (set of 2)	12	£20.34
1290	THREADED CLEAR ACRYLIC DISC	13	£94.54
1789	2" S.N.N GASKET (3mm Thk)	14	£2.33
1434	2" COUNTOURED SPACING DISC	15	£4.85
W12065	2" S.N.N Body + Nut	16	£21.12
1767	M12 BLACK NUT CAP (pack of 10)	17	£6.88
1685	M12 SS NUT	18	£1.29
1684	M12 SS WASHER (pack of 5)	19	£4.42
W12050	10 HOLE ROUND HATCH COVER	20	£114.18
W22017	10 HOLE GASKET	21	£21.20
1547 (W12633)	FILTER & NOZZLE & SOCKET (X 24)	22	£11.38
1282	M16 RUBBER 'O' RING	23	£0.77
1710	STUB FLANGE BULKHEAD GASKET (BOTTOM)	24	£6.15
1712	STUB FLANGE (BOTTOM)	25	£24.69
1711	FLANGE COLLAR (BOTTOM)	26	£44.22
1769	M16 SS WASHER (pack of 5)	27	£4.60
1762	M16 SS NUT	28	£2.28
1768	M16 BLACK NUT CAP (pack of 10)	29	£6.88
W04058BLK	AIRBLEED CAP	30	£2.84
17134	DBK - 24 AIRBLEED TUBE	31	£10.13
1462	3/4" - 1/2" REDUCING BUSH	32	£2.97
1461	1/2" P70 PLUG	33	£3.74
1462A (1461 + 1462)	1/2" KOK DRAIN PLUG COMPLETE	34	£55.25

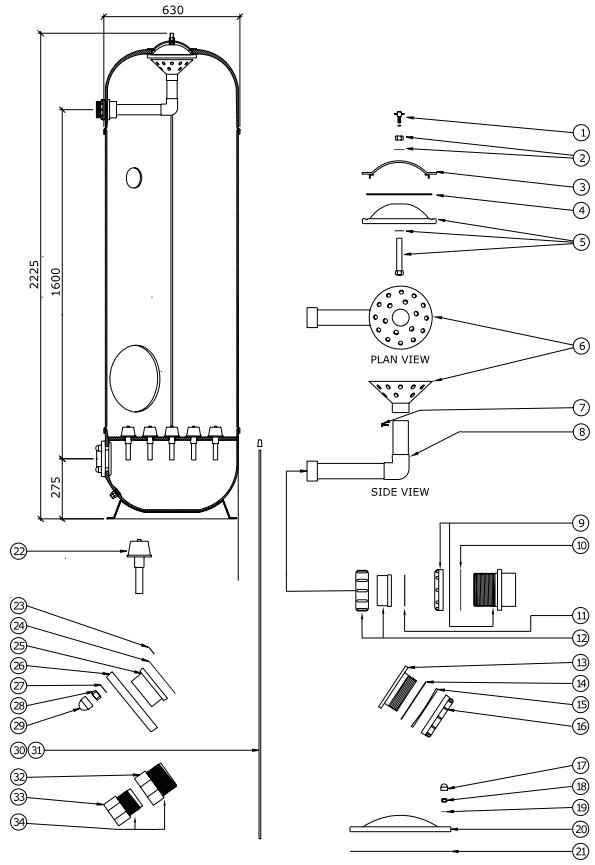

Part Number	Product Description	Diagram No.	LIST PRICE
W12076	NYLON AIR RELIEF TAP + 'O' RING		£8.41
W12248	SMALL OVAL LID RETAINING CLAMP c/w SCREW & NUT		£42.00
1993 (W12284)	SMALL OVAL LID 'O' RING		£11.38
W12135	SMALL OVAL LID		£91.85
W02066	ROSE DISTRIBUTOR	6	£7.98
1671	3/4" SELF TAPPING SCREW (pack of 10)	7	£4.79
1406	DBK 30 HEADER LESS ROSE	8	£67.23
6014A (W12065 + 1472)	2" BULKHEAD FITTING (PLUS NUT)	9	£21.73
6016 (1521)	2" BULKHEAD GASKET (set of 2)	10	£21.27
6005 (1523)	2" UNION ADAPTOR GASKET (set of 2)	11	£8.35
6022 (W02983 + W02982)	2" UNION ADAPTOR (PLUS SLEEVE) (set of 2)	12	£20.34
1290	THREADED CLEAR ACRYLIC DISC	13	£94.54
1789	2" S.N.N GASKET (3mm Thk)	14	£2.33
1434	2" COUNTOURED SPACING DISC	15	£4.85
W12065	2" S.N.N Body + Nut	16	£21.12
1767	M12 BLACK NUT CAP (pack of 10)	17	£6.88
1685	M12 SS NUT	18	£1.29
1684	M12 SS WASHER (pack of 5)	19	£4.42
W12136	12 HOLE ROUND HATCH COVER	20	£114.18
1529	12 HOLE GASKET	21	£21.20
1547 (W12633)	FILTER & NOZZLE & SOCKET (X 24)	22	£11.38
1282	M16 RUBBER 'O' RING	23	£0.77
1710	STUB FLANGE BULKHEAD GASKET (BOTTOM)	24	£6.15
1712	STUB FLANGE (BOTTOM)	25	£24.69
1711	FLANGE COLLAR (BOTTOM)	26	£44.22
1769	M16 SS WASHER (pack of 5)	27	£4.60
1762	M16 SS NUT	28	£2.28
1768	M16 BLACK NUT CAP (pack of 10)	29	£6.88
W12045	AIRBLEED CAP	30	£2.84
17135	DBK - 30 AIRBLEED TUBE	31	£10.13
1462	3/4" - 1/2" REDUCING BUSH	32	£2.97
1461	1/2" P70 PLUG	33	£3.74
1462A (1461 + 1462)	1/2" KOK DRAIN PLUG COMPLETE	34	£55.25

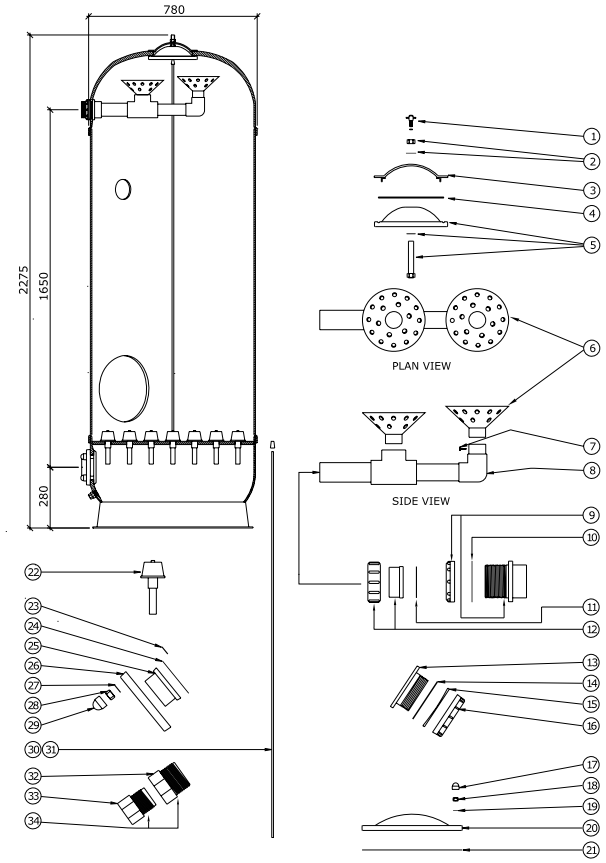

WATERCO
Water, the liquid of life

DBK - 42

Part Number	Product Description	Diagram No.	LIST PRICE
W12076	NYLON AIR RELIEF TAP + 'O' RING		£8.41
W12248	SMALL OVAL LID RETAINING CLAMP c/w SCREW & NUT		£42.00
1993	SMALL OVAL LID 'O' RING		£11.38
W12135	SMALL OVAL LID		£91.85
1423C	42" MAIN HEADER 'T'	6	£99.45
1423B	DBK 42 RHS HEADER ROSE	7	£162.66
W02066	ROSE DISTRIBUTOR	8	£7.98
1671	3/4" SELF TAPPING SCREW (pack of 10)	10	£4.79
6017 (W02252B + W2254B)	3" BULKHEAD FITTING (PLUS NUT)	11	£34.14
6019 (1560)	3" BULKHEAD GASKET (pack of 2)	12	£12.16
6018 (W02253BLK / W02255BLK / W02255EBLK)	3" ADAPTOR UNION (PLUS SLEEVE) 'O' Ring type	16	£28.12
6020 (1559)	3" ADAPTOR GASKET (set of 2) **Pre 2007**	17	£10.25
6020A	3"/90mm ADAPTOR 'O' RING (set of 2) **Post 2007**	17	£10.15
1290	THREADED CLEAR ACRYLIC DISC	15	£94.54
1789	2" S.N.N GASKET (3mm Thk)	16	£2.33
1434	2" COUNTOURED SPACING DISC	17	£4.85
W12065	2" S.N.N Body + Nut	18	£21.12
1767	M12 BLACK NUT CAP (pack of 10)	19	£6.88
1685	M12 SS NUT	20	£1.29
1684	M12 SS WASHER (pack of 5)	21	£4.42
W12311	18 HOLE OVAL HATCH COVER		£151.20
1713	18 HOLE GASKET		£24.27
1547 (W12633)	FILTER & NOZZLE & SOCKET (X 24)	24	£11.38
1282	M16 RUBBER 'O' RING	25	£0.77
1710	STUB FLANGE BULKHEAD GASKET (BOTTOM)	26	£6.15
1712	STUB FLANGE (BOTTOM)	27	£24.69
1711	FLANGE COLLAR (BOTTOM)	28	£44.22
1769	M16 SS WASHER (pack of 5)	29	£4.60
1762	M16 SS NUT	30	£2.28
1768	M16 BLACK NUT CAP (pack of 10)	31	£6.88
W12045	AIRBLEED CAP	32	£2.84
17136	DBK 42 AIRBLEED TUBE	33	£10.13
1462	3/4" - 1/2" REDUCING BUSH	34	£2.97
1461	1/2" P70 PLUG	35	£3.74
1462A (1461 + 1462)	1/2" KOK DRAIN PLUG COMPLETE	36	£55.25

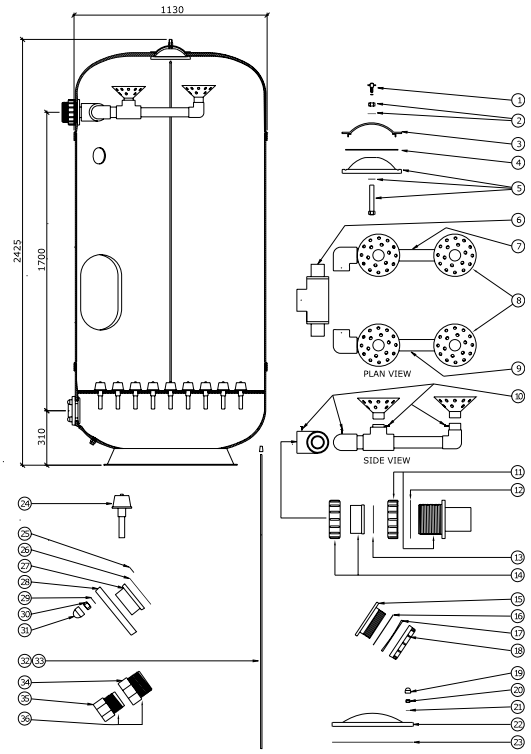

Part Number	Product Description	Diagram No.	LIST PRICE
1762	M16 S/S HEX NUT	1	£2.28
1769	M16 S/S WASHER (pack of 5)	2	£4.60
6209430	LACRON LID YOKE	3	£78.37
2611A	LACRON OVAL LID 'O' RING	4	£39.26
W12308	LACRON 4 STUD OVAL LID	5	£279.94
W02066	ROSE DISTRIBUTOR	6	£7.98
17401	48" LHS HEADER (LESS ROSE)	7	£106.25
17404	48" MAIN HEADER PIPE INLET 'T'	8	£111.96
17402	48" RHS HEADER (LESS ROSE)	9	£106.25
17403	48" MAIN HEADER PIPE SUPPORT 'T'	10	£28.47
1671	3/4" SELF TAPPING SCREW (pack of 10)	11	£4.79
6017 (W02252B + W2254B)	3" BULKHEAD FITTING (PLUS NUT)	12	£34.14
6019 (1560)	3" BULKHEAD GASKET (pack of 2)	13	£12.16
6018 (W02253BLK / W02255BLK / W02255EBLK)	3"/90mm ADAPTOR UNION (PLUS SLEEVE) **'O' Ring type**	16	£28.12
6020 (1559)	3"/90mm ADAPTOR GASKET (set of 2) **Pre 2007**	17	£10.25
6020A	3"/90mm ADAPTOR 'O' RING (set of 2) **Post 2007**	17	£10.15
1290	THREADED CLEAR ACRYLIC DISC	16	£94.54
1789	2" S.N.N GASKET (3mm Thk)	17	£2.33
1434	2" COUNTOURED SPACING DISC	18	£4.85
W12065	2" S.N.N Body + Nut	19	£21.12
1767	M12 BLACK NUT CAP (pack of 10)	20	£6.88
1685	M12 SS NUT	21	£1.29
1684	M12 SS WASHER (pack of 5)	22	£4.42
W12311	18 HOLE OVAL HATCH COVER		£151.20
1713	18 HOLE GASKET		£24.27
1547	FILTER & NOZZLE & SOCKET (X 91)	25	£11.38
1282	M16 RUBBER 'O' RING	26	£0.77
1710	STUB FLANGE BULKHEAD GASKET (BOTTOM)	27	£6.15
1712	STUB FLANGE (BOTTOM)	28	£24.69
1711	FLANGE COLLAR (BOTTOM)	29	£44.22
1769	M16 SS WASHER (pack of 5)	30	£4.60
1762	M16 SS NUT	31	£2.28
1768	M16 BLACK NUT CAP (pack of 10)	32	£6.88
1656	AIRBLEED CAP	33	£2.84
17106A	DBK 48 AIRBLEED TUBE (2 PIECES)	34	£39.29
1462	3/4" - 1/2" REDUCING BUSH	35	£2.97
1461	1/2" P70 PLUG	36	£3.74
1462A (1461 + 1462)	1/2" KOK DRAIN PLUG COMPLETE	37	£55.25

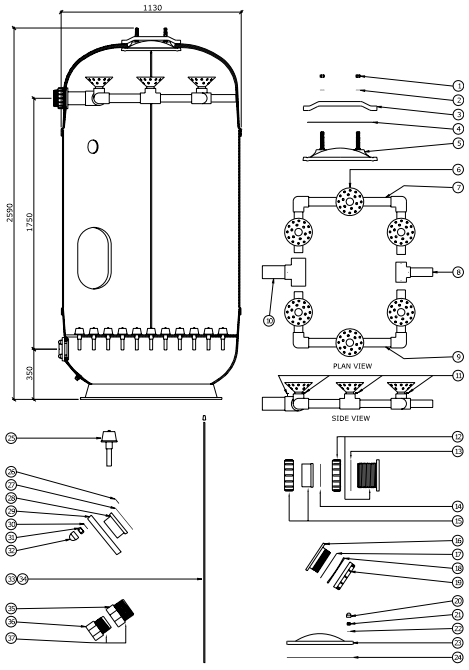

WATERCO
Water, the liquid of life

HPF - 18

Part Number	Product Description	Diagram No.	LIST PRICE
W12076	NYLON AIR RELIEF TAP + 'O' RING		£8.41
W12248	SMALL OVAL LID RETAINING CLAMP c/w SCREW & NUT		£42.00
1993 (W12284)	SMALL OVAL LID 'O' RING		£11.38
W12135	SMALL OVAL LID		£91.85
W12087	HEXAGONAL HUB	4	£3.22
17160	18" - 1.5" HP HEADER (LESS ROSE)	6	£30.39
W12045	AIR BLEED CAP	7	£2.84
17130	18" DBF STANDARD/HP AIRBLEED TUBE	8	£9.21
1365A	18" - 1.5" UNDERDRAIN LESS CANDLES	9	£39.29
1318 (W12231)	113mm HEAVY DUTY LATERAL (X 6)	10	£9.50
1393B	18" DBF - LATERAL (CANDLE) SET	11	£46.66
6013 (W02989 + W02271BLK)	1.5" BULKHEAD FITTING	12	£18.21
6015 (1520)	1.5" BULKHEAD GASKET (set of 2)	13	£8.36
6021 (W02981 + W02980)	1.5" UNION ADAPTOR (set of 2)	14	£16.06
6004 (1522)	1.5" UNION ADAPTOR GASKET (set of 2)	15	£5.08
W04058BLK	1.5" SAND DRAIN COMPLETE	16	£58.22
6001 (W02026BLK)	DRAIN PLUG COMPLETE	17	£11.60
W02026ABLK	DRAIN PLUG CAP	18	£4.85
1671	3/4" SELF TAP SCREW (pack of 10)	19	£4.79
	POST 2004		
6023 (W02209BLK + W02210BLK)	1.5" Union Adaptor nut and sleeve (set of 2)		£16.06
6026 (W02213)	1.5" Union adaptor 'O' Ring (set of 2)		£5.08

PLEASE NOTE: 1.1/2" Lacron filters manufactured pre 2004 will have union adaptors (Barrel Unions) with **flat gaskets**
1.1/2" Lacron filters manufactured post 2004 will have union adaptors (Barrel Unions) with 'O' rings

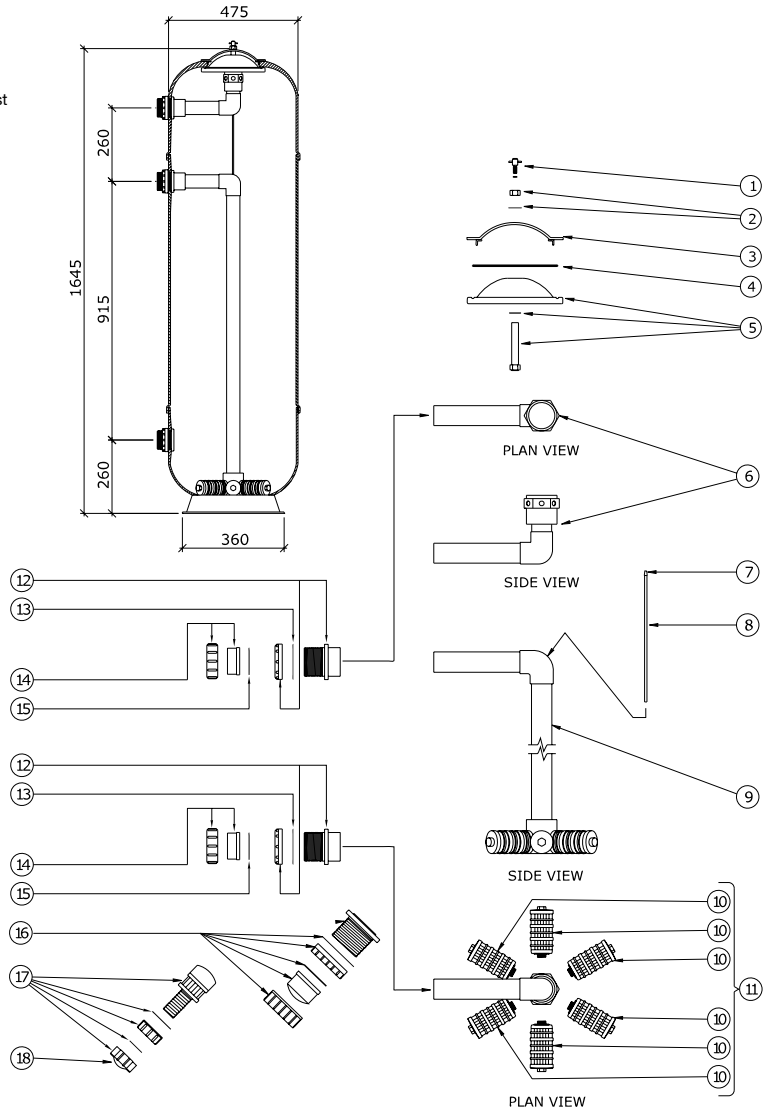

Part Number	Product Description	Diagram No.	LIST PRICE
W12076	NYLON AIR RELIEF TAP + 'O' RING	1	£8.41
W12248	SMALL OVAL LID RETAINING CLAMP c/w SCREW & NUT		£42.00
1993	SMALL OVAL LID 'O' RING		£11.38
W12135	SMALL OVAL LID		£91.85
W12087	HEXAGONAL HUB	4	£3.22
1366	24" HEADER ASSEMBLY COMPLETE LESS ROSE	6	£33.76
1318 (W12231)	113mm HEAVY DUTY LATERAL (X 4)	7	£9.50
1319 (W12232)	206mm HEAVY DUTY LATERAL (X 6)	8	£15.18
1394B	24" DBF - LATERAL (CANDLE) SET	9	£71.56
W12045	AIR BLEED CAP	10	£2.84
17131	AIRBLEED TUBE	11	£11.36
1382	1.5" UNDERDRAIN LESS CANDLES	12	£100.58
6014A (W12065 + 1472)	2" BULKHEAD FITTING (PLUS NUT)	13	£21.73
6016 (1521)	2" BULKHEAD GASKET (set of 2)	14	£21.27
6022 (W02983 + W02982)	2" UNION ADAPTOR (PLUS SLEEVE) (set of 2)	15	£20.34
6005 (1523)	2" UNION ADAPTOR GASKET (set of 2)	16	£8.36
W04058BLK	1.5" SAND DRAIN COMPLETE	17	£58.22
6001 (W02026BLK)	DRAIN PLUG COMPLETE	18	£11.60
W02026ABLK	DRAIN PLUG CAP	19	£4.85
1671	3/4" SELF TAP SCREW (pack of 10)	20	£4.79

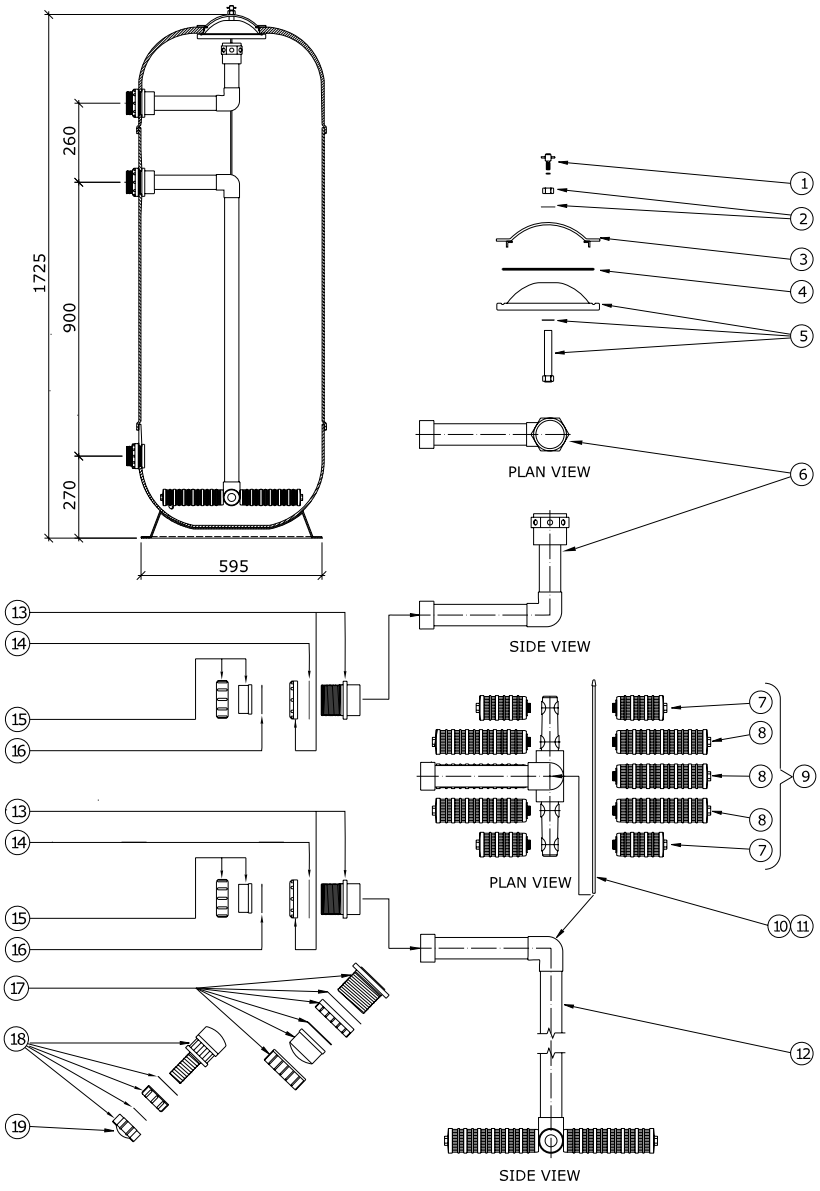

WATERCO
Water, the liquid of life

HPF - 30

Part Number	Product Description	Diagram No.	LIST PRICE
W12076	NYLON AIR RELIEF TAP + 'O' RING		£8.41
W12248	SMALL OVAL LID RETAINING CLAMP c/w SCREW & NUT		£42.00
1993 (W12284)	SMALL OVAL LID 'O' RING		£11.38
W12135	SMALL OVAL LID		£91.85
W02066	ROSE DISTRIBUTOR	7	£7.98
1370	30" - 2" HEADER (LESS ROSE)	8	£55.05
1318	113mm HEAVY DUTY LATERAL (X 4)	9	£9.50
1319	206mm HEAVY DUTY LATERAL (X 4)	10	£15.18
1320	238mm HEAVY DUTY LATERAL (X 6)	11	£17.09
1395B	30" DBF - LATERAL (CANDLE) SET	12	£181.01
W12045	AIR BLEED CAP	13	£2.84
17132	30" DBF STANDARD/HP AIRBLEED TUBE	14	£11.36
1383	30" - 2" UNDERDRAIN LESS CANDLES	15	£120.32
6014	2" BULKHEAD FITTING (PLUS NUT)	16	£21.73
6016 (1521)	2" BULKHEAD GASKET (set of 2)	17	£21.27
6022 (W02983 + W02982)	2" UNION ADAPTOR (PLUS SLEEVE) (set of 2)	18	£20.34
6005 (1523)	2" UNION ADAPTOR GASKET (set of 2)	19	£8.36
W04058BLK	1.5" SAND DRAIN COMPLETE	20	£58.22
6001 (W02026BLK)	DRAIN PLUG COMPLETE	21	£11.60
W02026ABLK	DRAIN PLUG CAP	22	£4.85
1671	3/4" SELF TAP SCREW (pack of 10)	23	£4.79

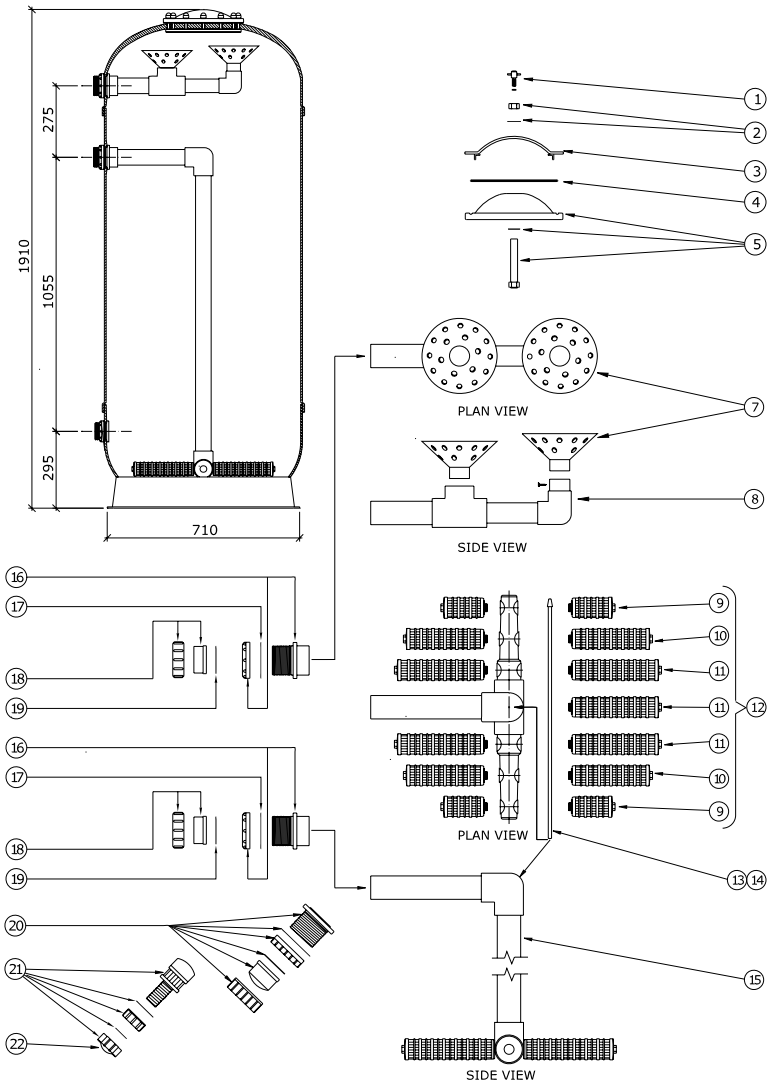

Part Number	Product Description	Diagram No.	LIST PRICE
W12076	NYLON AIR RELIEF TAP + 'O' RING		£8.41
W12248	SMALL OVAL LID RETAINING CLAMP c/w SCREW & NUT		£42.00
1993 (W12284)	SMALL OVAL LID 'O' RING		£11.38
W12135	SMALL OVAL LID		£91.85
W02066	ROSE DISTRIBUTOR	7	£7.98
1372	42" LHS HEADER (LESS ROSE)	8	£70.60
1372A	42" RHS HEADER (LESS ROSE)	9	£70.60
1372B	42" MAIN HEADER 'T'	10	£99.45
W12045	AIR BLEED CAP	11	£2.84
17133	AIRBLEED TUBE	12	£12.89
1274	82mm HEAVY DUTY LATERAL (X 4)	13	£8.55
1320 (W12233)	238mm HEAVY DUTY LATERAL (X 4)	14	£17.09
1277	300mm HEAVY DUTY LATERAL (X 12)	15	£19.37
1396B	LATERAL (CANDLE) SET	16	£166.80
1371	42" LHS UNDERDRAIN (LESS CANDLES)	17	£84.63
1371A	42" RHS UNDERDRAIN (LESS CANDLES)	18	£84.63
1371B	42" MAIN UNDERDRAIN 'T' & CON PIPE	19	£99.45
6017 (W02252B + W2254B)	3" BULKHEAD FITTING (PLUS NUT)	20	£34.14
6019 (1560)	3" BULKHEAD GASKET (set of 2)	21	£12.16
1525A	42" - 3" BULKHEAD FITTING (TOP)	22	£41.74
1525B	42" - 3" BULKHEAD FITTING (BOTTOM)	23	£42.97
6018 (W02253BLK / W02255BLK / W02255EBLK)	3" ADAPTOR UNION (PLUS SLEEVE) 'O' Ring type	24	£28.12
6020 (1559)	3" ADAPTOR GASKET (set of 2) **Pre 2007**	25	£10.25
6020A	3"/90mm Adaptor 'O' Ring (set of 2) **Post 2007**	–	£10.15
W04058BLK	1.5" SAND DRAIN COMPLETE	26	£58.22
6001 (W02026BLK)	DRAIN PLUG COMPLETE	27	£11.60
W02026ABLK	DRAIN PLUG CAP	28	£4.85
1671	3/4" SELF TAP SCREW (pack of 10)	29	£4.79

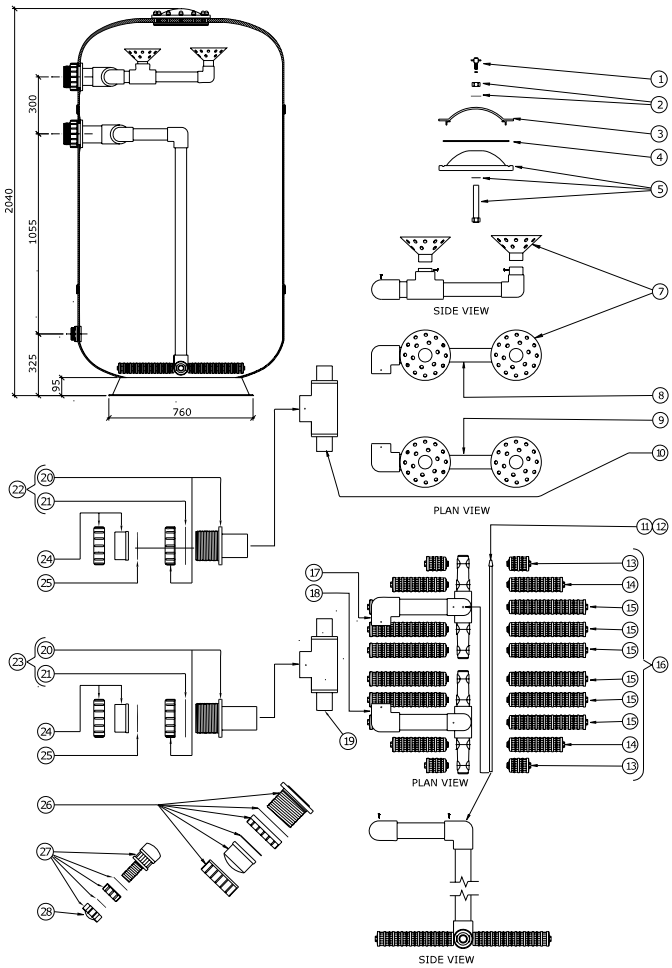

WATERCO
Water, the liquid of life

HZC - 30

Part Number	Product Description	Diagram No.	LIST PRICE
1762 (W12127)	M16 S/S HEX NUT	1	£2.29
1769 (W12126)	M16 S/S WASHER (pack of 5)	2	£4.60
6209430	LACRON LID YOKE EACH	3	£78.37
W12304	LACRON OVAL LID 'O' RING (OLD SQUARE)	4	£39.26
2611	LACRON OVAL LID 'O' RING (NEW ROUND)	4A	£27.53
W12303	LACRON 4 STUD OVAL LID	5	£279.94
W12308	MANHOLE LID 4 STUD COMPLETE WITH YOKE, NUTS, BOLTS 'O' RING	1 to 5	£405.29
1328E	30" LACRON HORIZONTAL HEADER	6	£301.42
6017 (W02252B + W2254B)	3" BULKHEAD FITTING (Plus nut)	7	£35.25
6020 (1559)	3"/90mm ADAPTOR GASKET (set of 2) **Pre 2007**	8	£10.25
6020A	3"/90mm Adaptor Gasket (set of 2) **Post 2007**	–	£10.15
6018 (W02253BLK / W02255BLK / W02255EBLK)	3"/90mm ADAPTOR UNION (PLUS SLEEVE) **'O' Ring type**	9	£28.12
1328D	30" HORIZONTAL UNDERDRAIN LESS CANDLES	10	£366.49
1319	HEAVY DUTY CANDLES 206mm (each)	11	£15.18
W04058BLK	1.5" SAND DRAIN COMPLETE	12	£58.22
17103A	30" HORIZONTAL AIRBLEED COMPLETE	13	£5.09
1319A	HEAVY DUTY CANDLES SET	14	£322.91

At time of printing schematic not available - please contact Waterco for assistance.

Part Number	Product Description	Diagram No.	LIST PRICE
1762	M16 S/S HEX NUT	1	£2.28
1769	M16 S/S WASHER (pack of 5)	2	£4.60
6209430	LACRON LID YOKE EACH	3	£78.37
W12304	LACRON OVAL LID 'O' RING (OLD SQUARE)	4	£39.26
2611	LACRON OVAL LID 'O' RING (NEW ROUND)	4A	£27.53
17400A	LACRON 4 STUD OVAL LID	5	£279.94
W12308	MANHOLE LID 4 STUD COMPLETE WITH YOKE, NUTS, BOLTS 'O' RING	1 to 5	£405.30
1387F	HZC 36 HEADER ASSY COMPLETE	6	£325.36
1387E	HZC 36 UNDERDRAIN ASSY COMPLETE	7	£386.75
1319	HEAVY DUTY LATERALS 206mm (X 4)	8	£15.18
1320	HEAVY DUTY LATERALS 238mm (X 24)	9	£17.09
1387J	HEAVY DUTY LATERAL SET COMPLETE	10	£423.59
17104A	HZC 36 AIRBLEED ASSY COMPLETE	11	£33.76
W12045	AIRBLEED CAP	11A	£2.84
1474	1/4" AIRBLEED ADAPTOR FIXING	11B	£14.73
2613	3" PIPE CLAMP SET COMPLETE (EACH)	12	£10.44
2618	1 M VARIABLE BRACE BAR	13	£46.66
6017 (W02252B + W2254B)	3" BULKHEAD & NUT	14	£34.14
1560	3" BULKHEAD GASKET (SET OF 2)	15	£12.16
6018 (W02253BLK / W02255BLK / W02255EBLK)	3"/90mm ADAPTOR UNION (PLUS SLEEVE) **'O' Ring type**	16	£28.12
6020 (1559)	3"/90mm ADAPTOR GASKET (set of 2) **Pre 2007**	17	£10.25
6020A	3"/90mm Adaptor Gasket (set of 2) **Post 2007**	17	£10.15
W04058BLK	1.5" SAND DRAIN COMPLETE	18	£58.22
6001 (W02026BLK)	DRAIN PLUG COMPLETE	19	£11.60
W02026ABLK	DRAIN PLUG CAP	20	£4.85

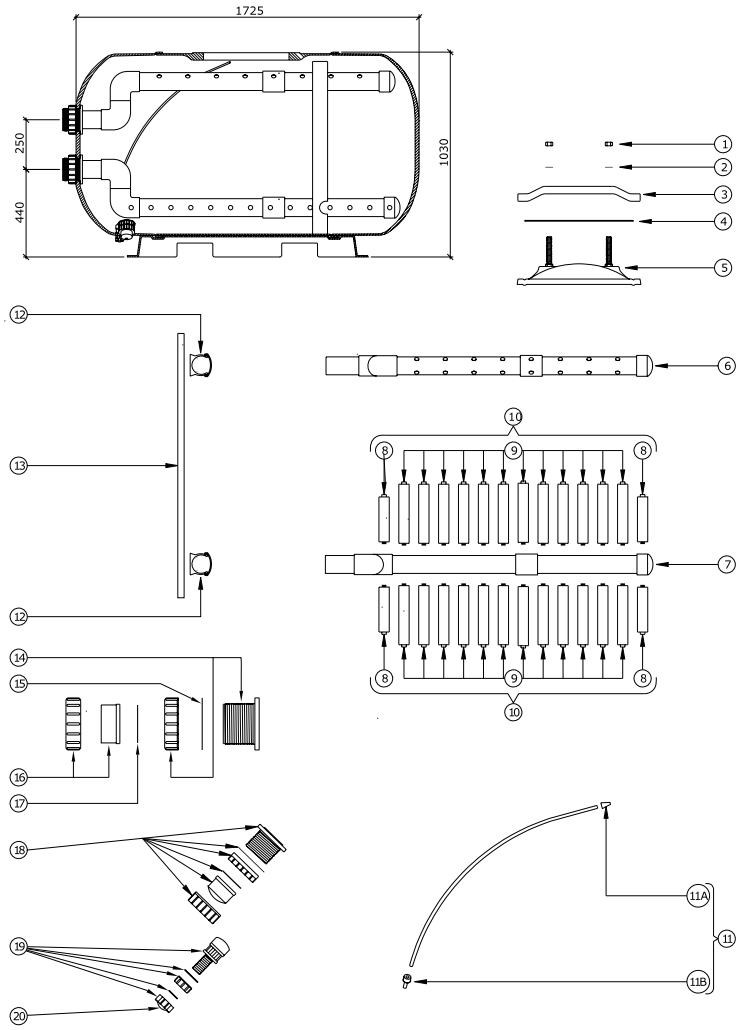

WATERCO
Water, the liquid of life

HZC - 42

Part Number	Product Description	Diagram No.	LIST PRICE
1762	M16 S/S HEX NUT	1	£2.28
1769	M16 S/S WASHER (pack of 5)	2	£4.60
6209430	LACRON LID YOKE EACH	3	£78.37
W12304	LACRON OVAL LID 'O' RING (OLD SQUARE)	4	£39.26
2611	LACRON OVAL LID 'O' RING (NEW ROUND)	4A	£27.53
W12308	MANHOLE LID 4 STUD COMPLETE WITH YOKE, NUTS, BOLTS 'O' RING	1 to 5	£405.29
1390E	HZC 42 HEADER ASSY COMPLETE	6	£472.70
1390G	HZC 42 UNDERDRAIN ASSY COMPLETE	7	£570.92
1319	HEAVY DUTY LATERALS 206mm (X 4)	8	£15.18
1277	HEAVY DUTY LATERALS 300mm (X 2)	9	£19.37
1275	HEAVY DUTY LATERALS 268mm (X 38)	10	£18.98
1402	HEAVY DUTY LATERAL SET COMPLETE	11	£615.92
1390A	HZC 42 AIRBLEED ASSY COMPLETE	12	£46.04
6006 (W02984)	60mm LATERAL (AIR BLEED STRAINER)	12A	£7.00
1474	1/4" ADAPTOR FIXING	12B	£14.73
2614	4" PIPE CLAMP (2 PER SET)	13	£22.10
2618	1 M VARIABLE BRACE BAR	14	£46.66
1478B	2" SAND DRAIN COMPLETE	15	£58.22
1554	4" 8 STUD BACKING RING	16	£93.36
1534	4" GASKET LARGE (8 HOLE)	17	£9.65
1540	4" / 110mm PVC FLANGE	18	£102.46
1535	4" GASKET SMALL (8 HOLE)	19	£9.65
1552	4" FACING RING	20	£66.18
1684	M12 S/S WASHER (pack of 5)	21	£4.42
1685	M12 S/S NUT	22	£1.29
1767	M12 BLACK NUT CAP (pack of 10)	23	£11.79

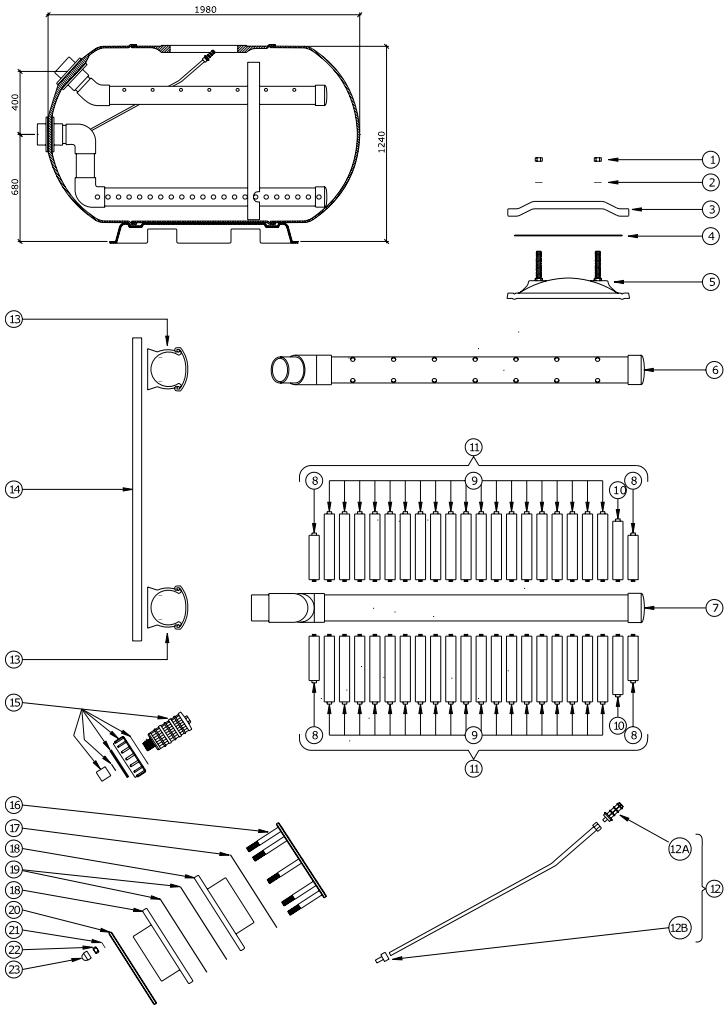

Part Number	Product Description	Diagram No.	LIST PRICE
1762	M16 S/S HEX NUT	1	£2.28
1769	M16 S/S WASHER (pack of 5)	2	£4.60
6209430	LACRON LID YOKE EACH	3	£78.37
W12304	LACRON OVAL LID 'O' RING (OLD SQUARE)	4	£39.26
2611	LACRON OVAL LID 'O' RING (NEW ROUND)	4A	£27.53
W12308	MANHOLE LID 4 STUD COMPLETE WITH YOKE, NUTS, BOLTS 'O' RING	1 to 5	£405.29
48278	HZC 48 HEADER ASSY COMPLETE	6	£865.59
48277	HZC 48 UNDERDRAIN ASSY COMPLETE	7	£1,243.72
1277	HEAVY DUTY LATERALS 300mm (EACH) (X 44)	8	£19.37
72875	HEAVY DUTY LATERAL SET COMPLETE	9	£935.57
48276	HZC 48 AIRBLEED ASSY COMPLETE	10	£100.68
6006 (W02984)	60mm LATERAL (AIRBLEED STRAINER)	10A	£7.00
1474	1/4" ADAPTOR AIR BLEED FIXING	10B	£14.73
2615	6" PIPE CLAMP (SET OF 2)	11	£34.38
2618	1 M VARIABLE BRACE BAR	12	£46.66
1478B	2" SAND DRAIN COMPLETE	13	£58.22
2163	6" 8 STUD BACKING RING	14	£272.57
2166	6" GASKET LARGE (8 HOLE)	15	£21.49
2167	6" / 160mm PVC FLANGE (EACH)	16	£132.60
2165	6" GASKET SMALL (8 HOLE)	17	£21.49
2164	6" FACING RING	18	£168.21
1769	M16 S/S WASHER (pack of 5)	19	£4.60
1762	M16 S/S NUT	20	£2.28
1768	M16 BLACK NUT CAP (pack of 10)	21	£6.88

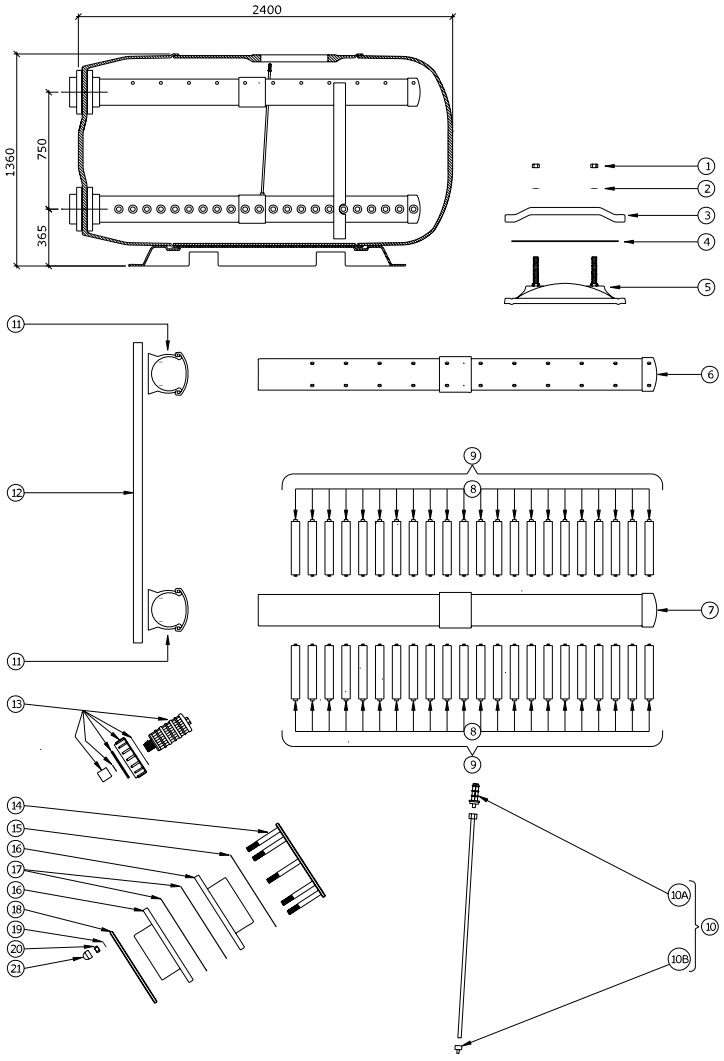

WATERCO
Water, the liquid of life

LCX/LCP - 1200

Part Number	Product Description	Diagram No.	LIST PRICE
6209430	LACRON LID YOKE	3	£78.37
2611	LACRON OVAL LID 'O' RING	4	£27.53
W12308	MANHOLE LID 4 STUD COMPLETE WITH YOKE, NUTS, BOLTS 'O' RING	1 to 5	£405.29
17501A	3" ROSE DISTRIBUTOR	6	£120.32
1373E	LCX-LCP 1200 HEADER ASSY COMPLETE	7	£300.81
2618	1 M VARIABLE BRACE BAR	8	£46.66
2613	3" PIPE CLAMP SET COMPLETE	9	£10.44
1373C	LCX 1200 UNDERDRAIN ASSY COMPLETE	10	£337.64
1373A	DRILLED & TAPPED COLLECTOR SET	11	£243.10
1318	HEAVY DUTY LATERALS 113mm (LCX) (X 6)	12	£9.50
1319	HEAVY DUTY LATERALS 206mm (LCX) (X 26)	13	£15.18
1320	HEAVY DUTY LATERALS 238mm (LCX) (X 6)	14	£17.09
1373D	HEAVY DUTY LATERAL SET COMPLETE	15	£498.70
1524	3" BULKHEAD & NUT	16	£9.02
1560	3" S.N.N GASKET (set of 2)	17	£12.16
1290	THREADED CLEAR ACRYLIC DISC	18	£94.54
1789	2" S.N.N GASKET (3mm Thk)	19	£2.33
1434	2" COUNTOURED SPACING DISC	20	£4.85
W12065	2" S.N.N BLACK	21	£21.12
17500B	LCX 1200 AIRBLEED ASSY COMPLETE	22	£46.04
W04058BLK	1.5" SAND DRAIN COMPLETE	23	£58.22
1767	M12 BLACK NUT CAP (pack of 10)	24	£6.88
1685	M12 S/S NUT	25	£1.29
1684	M12 S/S WASHER (pack of 5)	26	£4.42
42809A	LARGE OVAL HATCH (18 HOLE)	27	£166.80
1713	OVAL HATCH GASKET (18 HOLE)	28	£24.27
1753	M6 x 25mm SET SCREW (pack of 10)	29	£3.07
1753A	M6 x 20mm SET SCREW (pack of 10)	30	£3.07
1547 (W12633)	Filter Nozzle & Socket (LCP)	n/a	£11.38

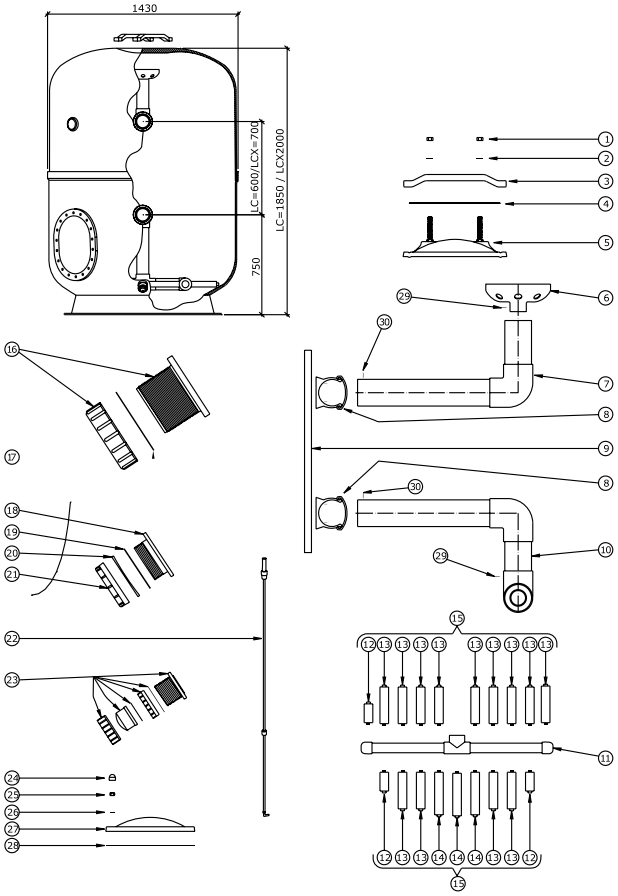

Part Number	Product Description	Diagram No.	LIST PRICE
6209430	LACRON LID YOKE	3	£78.37
2611	LACRON OVAL LID 'O' RING	4	£27.53
W12308	MANHOLE LID 4 STUD COMPLETE WITH YOKE, NUTS, BOLTS 'O' RING	1 to 5	£405.29
17501B	4" ROSE DISTRIBUTOR	6	£120.32
1373H	LCX-LCP 1400 HEADER ASSY COMPLETE	7	£349.92
2618	1 M VARIABLE BRACE BAR	8	£46.66
2614	4" PIPE CLAMP SET COMPLETE	9	£22.10
1373F	LCX 1400 UNDERDRAIN ASSY COMPLETE	10	£1,039.22
1373B	DRILLED & TAPPED COLLECTOR SET	11	£775.72
1318	HEAVY DUTY LATERALS 113mm (LCX) (X 4)	12	£9.50
1319	HEAVY DUTY LATERALS 206mm (LCX) (X 24)	13	£15.18
1320	HEAVY DUTY LATERALS 238mm (LCX) (X 4)	14	£17.09
1275	HEAVY DUTY LATERALS 268mm (LCX) (X 8)	15	£18.98
1373G	HEAVY DUTY LATERAL SET COMPLETE	16	£559.99
1554	4" 8 STUD BACKING RING	17	£93.36
1534	4" GASKET LARGE (8 HOLE)	18	£9.65
1540	4" / 110mm PVC FLANGE	19	£102.46
1535	4" GASKET SMALL (8 HOLE)	20	£9.65
1552	4" FACING RING	21	£66.18
1684	M12 S/S WASHER (pack of 5)	22	£4.42
1685	M12 S/S NUT	23	£1.29
1767	M12 BLACK NUT CAP (pack of 10)	24	£6.88
1290	THREADED CLEAR ACRYLIC DISC	25	£94.54
1789	2" S.N.N GASKET (3mm Thk)	26	£2.33
1434	2" COUNTOURED SPACING DISC	27	£4.85
W12065	2" S.N.N Body + Nut	28	£21.12
17500C	LCX 1400 AIRBLEED ASSY COMPLETE	29	£49.11
1478B	2" SAND DRAIN COMPLETE	30	£58.22
1767	M12 BLACK NUT CAP (pack of 10)	31	£6.88
1685	M12 S/S NUT	32	£1.29
1684	M12 S/S WASHER (pack of 5)	33	£4.42
42809A	LARGE OVAL HATCH (18 HOLE)	34	£166.80
1713	OVAL HATCH GASKET (18 HOLE)	35	£24.27
1753	M6 x 25mm SET SCREW (pack of 10)	36	£3.07
1753A	M6 x 20mm SET SCREW (pack of 10)	37	£3.07
1547 (W12633)	Filter Nozzle & Socket (LCP)	n/a	£11.38

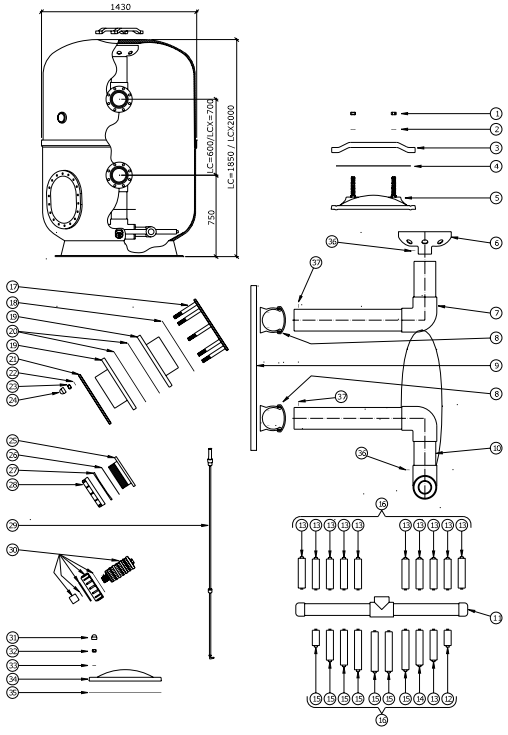

WATERCO
Water, the liquid of life

LCX/LCP - 1600

Part Number	Product Description	Diagram No.	LIST PRICE
6209430	LACRON LID YOKE	3	£78.37
2611	LACRON OVAL LID 'O' RING	4	£27.53
W12308	MANHOLE LID 4 STUD COMPLETE WITH YOKE, NUTS, BOLTS 'O' RING	1 to 5	£405.29
17501B	4" ROSE DISTRIBUTOR	6	£120.32
1374E	LCX-LCP 1600 HEADER ASSY COMPLETE	7	£362.20
2618	1 M VARIABLE BRACE BAR	8	£46.66
2614	4" PIPE CLAMP SET COMPLETE	9	£22.10
1374C	LCX 1600 UNDERDRAIN ASSY COMPLETE	10	£1,074.31
1374A	DRILLED & TAPPED COLLECTOR SET	11	£828.76
1318	HEAVY DUTY LATERALS 113mm (LCX) (X 4)	12	£9.50
1319	HEAVY DUTY LATERALS 206mm (LCX) (X 4)	13	£15.18
1320	HEAVY DUTY LATERALS 238mm (LCX) (X 28)	14	£17.09
1275	HEAVY DUTY LATERALS 268mm (LCX) (X 8)	15	£18.98
1401B	HEAVY DUTY LATERAL SET COMPLETE	16	£692.98
1882G	LIFTING EYE ASSEMBLY COMPLETE	17	£83.88
1554	4" 8 STUD BACKING RING	18	£93.36
1534	4" GASKET LARGE (8 HOLE)	19	£9.65
1540	4" / 110mm PVC FLANGE	20	£102.46
1535	4" GASKET SMALL (8 HOLE)	21	£9.65
1552	4" FACING RING	22	£66.18
1769	M16 S/S WASHER (pack of 5)	23	£4.60
1762	M16 S/S NUT	24	£2.28
1768	M16 BLACK NUT CAP (pack of 10)	25	£6.88
1290	THREADED CLEAR ACRYLIC DISC	26	£94.54
1789	2" S.N.N GASKET (3mm Thk)	27	£2.33
1434	2" COUNTOURED SPACING DISC	28	£4.85
W12065	2" S.N.N Body + Nut	29	£21.12
17500D	LCX 1600 AIRBLEED ASSY COMPLETE	30	£55.25
1478B	2" SAND DRAIN COMPLETE	31	£58.22
1767	M12 BLACK NUT CAP (pack of 10)	32	£6.88
1685	M12 S/S NUT	33	£1.29
1684	M12 S/S WASHER (pack of 5)	34	£4.42
42809A	LARGE OVAL HATCH (18 HOLE)	35	£166.80
1713	OVAL HATCH GASKET (18 HOLE)	36	£24.27
1753	M6 x 25mm SET SCREW (pack of 10)	37	£3.07
1753A	M6 x 20mm SET SCREW (pack of 10)	38	£3.07
1547 (W12633)	Filter Nozzle & Socket (LCP)	n/a	£11.38

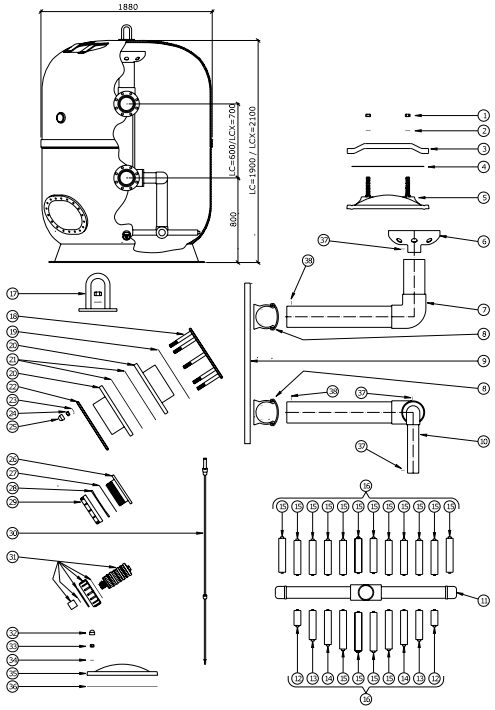

Part Number	Product Description	Diagram No.	LIST PRICE
6209430	LACRON LID YOKE	3	£78.37
2611	LACRON OVAL LID 'O' RING	4	£27.53
W12308	MANHOLE LID 4 STUD COMPLETE WITH YOKE, NUTS, BOLTS 'O' RING	1 to 5	£405.29
17501	6" ROSE DISTRIBUTOR	6	£120.32
72093	LCX-LCP 1850 HEADER ASSY COMPLETE	7	£399.03
2618	1 M VARIABLE BRACE BAR	8	£46.66
2615	6" PIPE CLAMP SET COMPLETE (set of 2)	9	£34.38
72092	LCX 1850 UNDERDRAIN ASSY COMPLETE	10	£1,209.37
1374B	DRILLED & TAPPED COLLECTOR SET	11	£890.15
1318	HEAVY DUTY LATERALS 113mm (LCX) (X 4)	12	£9.50
1319	HEAVY DUTY LATERALS 206mm (LCX) (X 4)	13	£15.18
1320	HEAVY DUTY LATERALS 238mm (LCX) (X 4)	14	£17.09
1275	HEAVY DUTY LATERALS 268mm (LCX) (X 8)	15	£18.98
1277	HEAVY DUTY LATERALS 300mm (LCX) (X 38)	16	£19.37
1374F	HEAVY DUTY LATERAL SET COMPLETE	17	£915.27
1882G	LIFTING EYE ASSEMBLY COMPLETE	18	£83.88
2163	6" 8 STUD BACKING RING	19	£272.57
2166	6" GASKET LARGE (8 HOLE)	20	£21.49
2167	6" / 160mm PVC FLANGE	21	£132.60
2165	6" GASKET SMALL (8 HOLE)	22	£21.49
2164	6" FACING RING	23	£168.21
1769	M16 S/S WASHER (pack of 5)	24	£4.60
1762	M16 S/S NUT	25	£2.28
1768	M16 BLACK NUT CAP (pack of 10)	26	£6.88
1290	THREADED CLEAR ACRYLIC DISC	27	£94.54
1789	2" S.N.N GASKET (3mm Thk)	28	£2.33
1434	2" COUNTOURED SPACING DISC	29	£4.85
W12065	2" S.N.N Body + Nut	30	£21.12
17500	LCX 1850 AIRBLEED ASSY COMPLETE	31	£58.93
1478A	3" SAND DRAIN COMPLETE	32	£58.22
1767	M12 BLACK NUT CAP (pack of 10)	33	£6.88
1685	M12 S/S NUT	34	£1.29
1684	M12 S/S WASHER (pack of 5)	35	£4.42
42809A	LARGE OVAL HATCH (18 HOLE)	36	£166.80
1713	OVAL HATCH GASKET (18 HOLE)	37	£24.27
1753	M6 x 25mm SET SCREW (pack of 10)	38	£3.07
1753A	M6 x 20mm SET SCREW (pack of 10)	39	£3.07
1547 (W12633)	Filter Nozzle & Socket (LCP)	n/a	£11.38

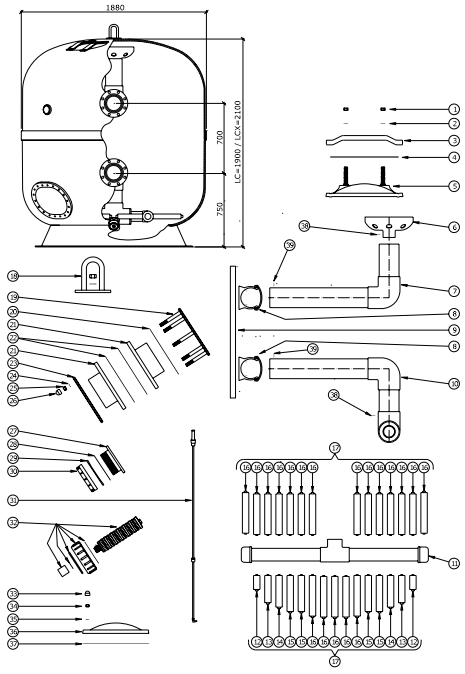

WATERCO
Water, the liquid of life

LCX/LCP - 2000

Part Number	Product Description	Diagram No.	LIST PRICE
6209430	LACRON LID YOKE	3	£78.37
2611	LACRON OVAL LID 'O' RING	4	£27.53
W12308	MANHOLE LID 4 STUD COMPLETE WITH YOKE, NUTS, BOLTS 'O' RING	1 to 5	£405.29
17501	6" ROSE DISTRIBUTOR	6	£120.32
72772	LCX-LCP 2000 HEADER ASSY COMPLETE	7	£423.59
2618	1 M VARIABLE BRACE BAR	8	£46.66
2615	6" PIPE CLAMP SET COMPLETE (set of 2)	9	£34.38
72771	LCX 2000 UNDERDRAIN ASSY COMPLETE	10	£1,258.48
1375B	DRILLED & TAPPED COLLECTOR SET	11	£890.15
1318	HEAVY DUTY LATERALS 113mm (LCX) (X 4)	12	£9.50
1319	HEAVY DUTY LATERALS 206mm (LCX) (X 4)	13	£17.09
1275	HEAVY DUTY LATERALS 268mm (LCX) (X 4)	14	£18.98
1277	HEAVY DUTY LATERALS 300mm (LCX) (X 6)	15	£19.37
1324	HEAVY DUTY LATERALS 361mm (LCX) (X 8)	16	£22.71
1324	HEAVY DUTY LATERALS 361mm (LCX) 9 X 54)	16	£23.63
72770	HEAVY DUTY LATERAL CANDLE SET	17	£1,039.67
1882G	LIFTING EYE ASSEMBLY COMPLETE	18	£83.88
2163	6" 8 STUD BACKING RING	19	£272.57
2166	6" GASKET LARGE (8 HOLE)	20	£21.49
2167	6" / 160mm PVC FLANGE	21	£132.60
2165	6" GASKET SMALL (8 HOLE)	22	£21.49
2164	6" FACING RING	23	£168.21
1769	M16 S/S WASHER (pack of 5)	24	£4.60
1762	M16 S/S NUT	25	£2.28
1768	M16 BLACK NUT CAP (pack of 10)	26	£6.88
1290	THREADED CLEAR ACRYLIC DISC	27	£94.54
1789	2" S.N.N GASKET (3mm Thk)	28	£2.33
1434	2" COUNTOURED SPACING DISC	29	£4.85
W12065	2" S.N.N Body + Nut	30	£21.12
17500A	LCX 2000 AIRBLEED ASSY COMPLETE	31	£58.93
1478A	3" SAND DRAIN COMPLETE	32	£58.23
1767	M12 BLACK NUT CAP (pack of 10)	33	£6.88
1685	M12 S/S NUT	34	£1.29
1684	M12 S/S WASHER (pack of 5)	35	£4.42
42809A	LARGE OVAL HATCH (18 HOLE)	36	£166.80
1713	OVAL HATCH GASKET (18 HOLE)	37	£24.27
1753	M6 x 25mm SET SCREW (pack of 10)	38	£3.07
1753A	M6 x 20mm SET SCREW (pack of 10)	39	£3.07
1547 (W12633)	Filter Nozzle & Socket (LCP)	n/a	£11.38

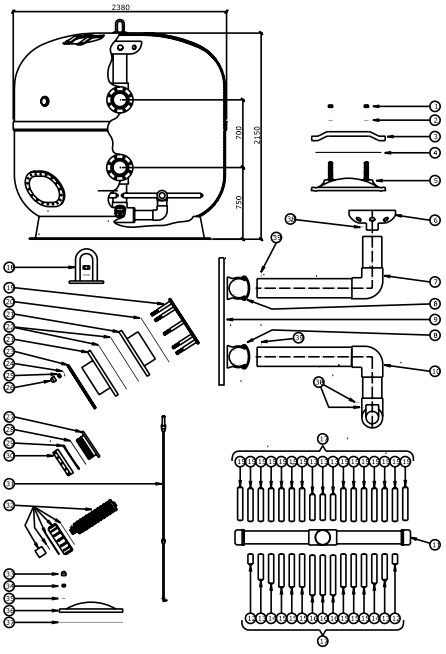

Part Number	Product Description	Diagram No.	LIST PRICE
6209430	LACRON LID YOKE	3	£78.37
2611	LACRON OVAL LID 'O' RING	4	£27.53
W12308	MANHOLE LID 4 STUD COMPLETE WITH YOKE, NUTS, BOLTS 'O' RING	1 to 5	£405.29
17501	6" ROSE DISTRIBUTOR	6	£120.32
72876	LCX-LCP 2350 HEADER ASSY COMPLETE	7	£442.00
2618	1 M VARIABLE BRACE BAR	8	£46.66
2615	6" PIPE CLAMP SET COMPLETE (set of 2)	9	£34.38
72877	LCX 2350 UNDERDRAIN ASSY COMPLETE	10	£1,381.26
1375B	DRILLED & TAPPED COLLECTOR SET	11	£890.15
1318	HEAVY DUTY LATERALS 113mm (LCX) (X 4)	12	£9.50
1319	HEAVY DUTY LATERALS 206mm (LCX) (X 10)	13	£15.18
1275	HEAVY DUTY LATERALS 268mm (LCX) (X 4)	14	£18.98
1277	HEAVY DUTY LATERALS 300mm (LCX) (X 40)	15	£19.37
1324	HEAVY DUTY LATERALS 361mm (LCX) (X 6)	16	£22.71
1325	HEAVY DUTY LATERALS 392mm (LCX)	17	£23.63
72785	HEAVY DUTY LATERAL SET COMPLETE	18	£1,525.44
1882G	LIFTING EYE ASSEMBLY COMPLETE	19	£83.88
2163	6" 8 STUD BACKING RING	20	£272.57
2166	6" GASKET LARGE (8 HOLE)	21	£21.49
2167	6" / 160mm PVC FLANGE	22	£132.60
2165	6" GASKET SMALL (8 HOLE)	23	£21.49
2164	6" FACING RING	24	£168.21
1769	M16 S/S WASHER (pack of 5)	25	£4.60
1762	M16 S/S NUT	26	£2.28
1768	M16 BLACK NUT CAP (pack of 10)	27	£6.88
1290	THREADED CLEAR ACRYLIC DISC	28	£94.54
1789	2" S.N.N GASKET (3mm Thk)	29	£4.85
1434	2" COUNTOURED SPACING DISC	30	£4.85
W12065	2" S.N.N BLACK	31	£21.12
17500E	LCX 2350 AIRBLEED ASSY COMPLETE	32	£52.18
1478A	3" SAND DRAIN COMPLETE	33	£58.22
1767	M12 BLACK NUT CAP (pack of 10)	34	£6.88
1685	M12 S/S NUT	35	£1.29
1684	M12 S/S WASHER (pack of 5)	36	£4.42
42809A	LARGE OVAL HATCH (18 HOLE)	37	£166.80
1713	OVAL HATCH GASKET (18 HOLE)	38	£24.27
1753	M6 x 25mm SET SCREW (pack of 10)	39	£3.07
1753A	M6 x 20mm SET SCREW (pack of 10)	40	£3.07
1547 (W12633)	Filter Nozzle & Socket (LCP)	n/s	£11.38

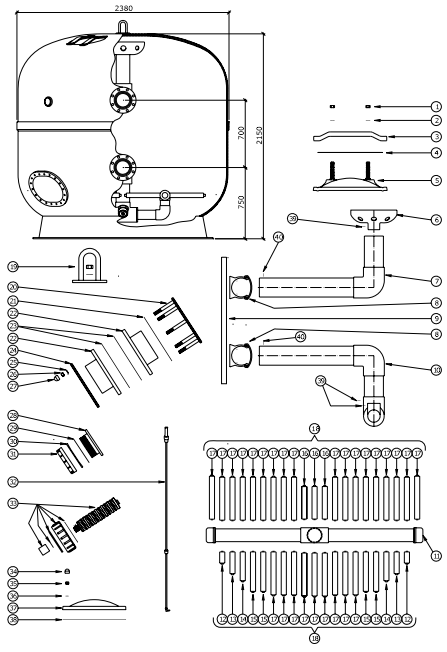

WATERCO
Water, the liquid of life

Electrochlor 20A, 30A, 20 ASC, 30A SC

Part Number	Product Description	Diagram No.	LIST PRICE
644084	Manual/OFF/Auto switch	1	£6.50
64113	Transformer 20A	2	£137.64
64116	Transformer 30A	2	£180.87
64501A	SCR assembly 20A SC & 30A SC	3	£109.57
64501B	SCR assembly 20A & 30A	3	£88.47
645083	PC board 20A & 30A	4	£125.50
645075	PC board 20A SC & 30A SC	4	£154.48
64128	Junction Box (suits all)	5	£11.77
641323	3 Amp Auto fuse	6	£19.50
644072	Timer only Electrochlor	7	£70.88
644025	Electrochlor Clear Perspex Front Cover	8	£4.32
644023	Top	9	£18.13
644022	Front	10	£38.52
644024	Base	11	£20.63
6440713	Mounting Bracket	12	£10.94
645003	Electrochlor Power Pack (20A)		£958.40
645002	Electrochlor Power Pack (30A)		£958.40
645004	Electrochlor Power Pack (20A SC)		£958.40
645001	Electrochlor Power Pack (30A SC)		£958.40
ACL030	Electrochlor cell assemby complete with housing (20A SC)	1A	£567.20
ACL031	Electrochlor cell assemby complete with housing (30A SC)	1A	£567.20
AXCL030	Electrochlor Electrode & Head Assembly (20A SC)	2A	£455.45
AXCL031	Electrochlor Electrode & Head Assembly (30A SC)	2A	£556.83
644954	Electrochlor Cell Assembly Complete with Housing (20A)	1B	£407.08
644953	Electrochlor Cell Assembly Complete with Housing (30A)	1B	£449.99
64428511	Cell electrode assembly 30A	2B	£397.80
64428611	Cell electrode assembly 20A	2B	£361.42
644331	Cell body (suits 20A & 30A) Electrochlor	3B	£35.57

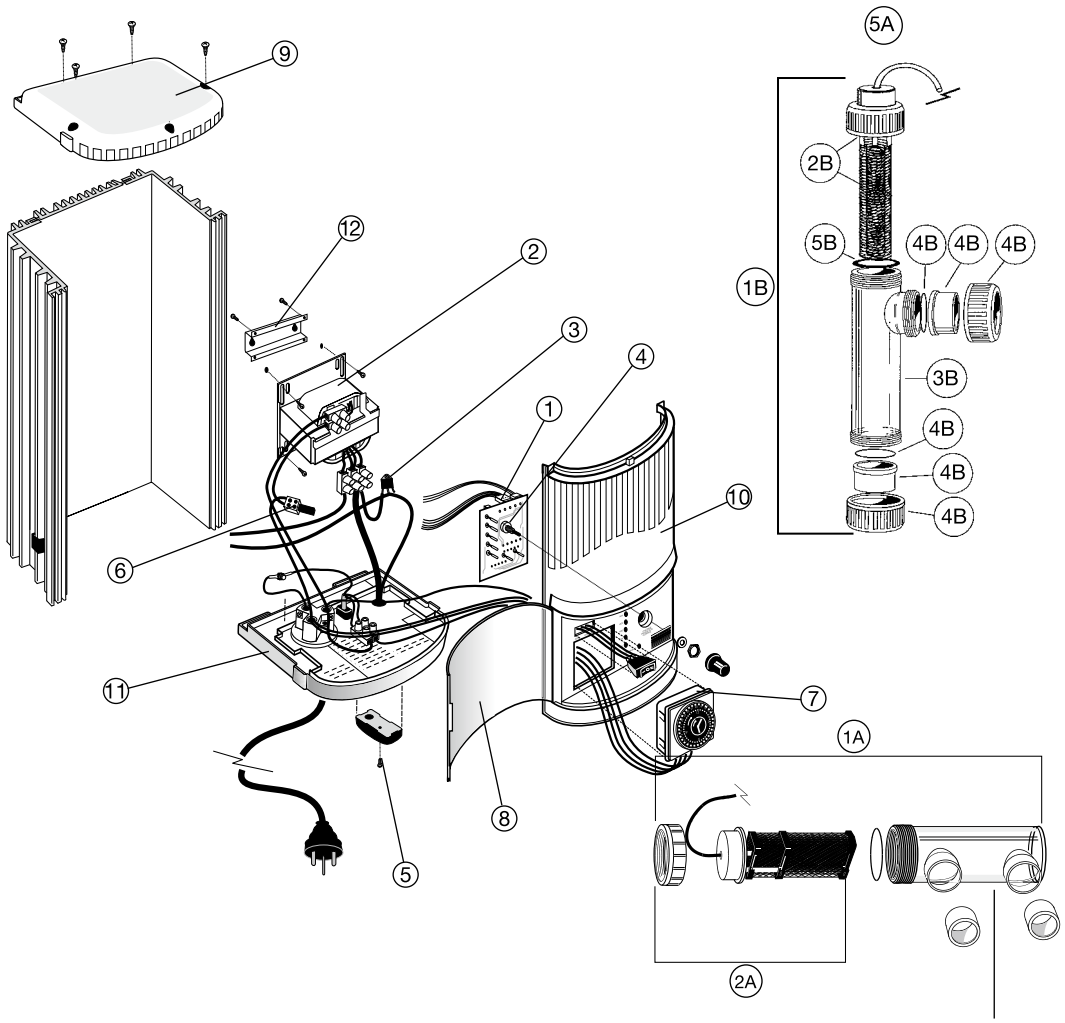

Waterking Inline Feeder

Part Number	Product Description	Diagram No.	LIST PRICE
64100	Water king o ring (Viton)	1	£21.35
64101	Union c/w o ring	2	£9.90
64101EU	Union c/w o ring 50mm	2	£9.90
64102	Lid c/w o ring	3	£45.64
64103	Body	4	£58.33
595388	Center stem	5	£4.96

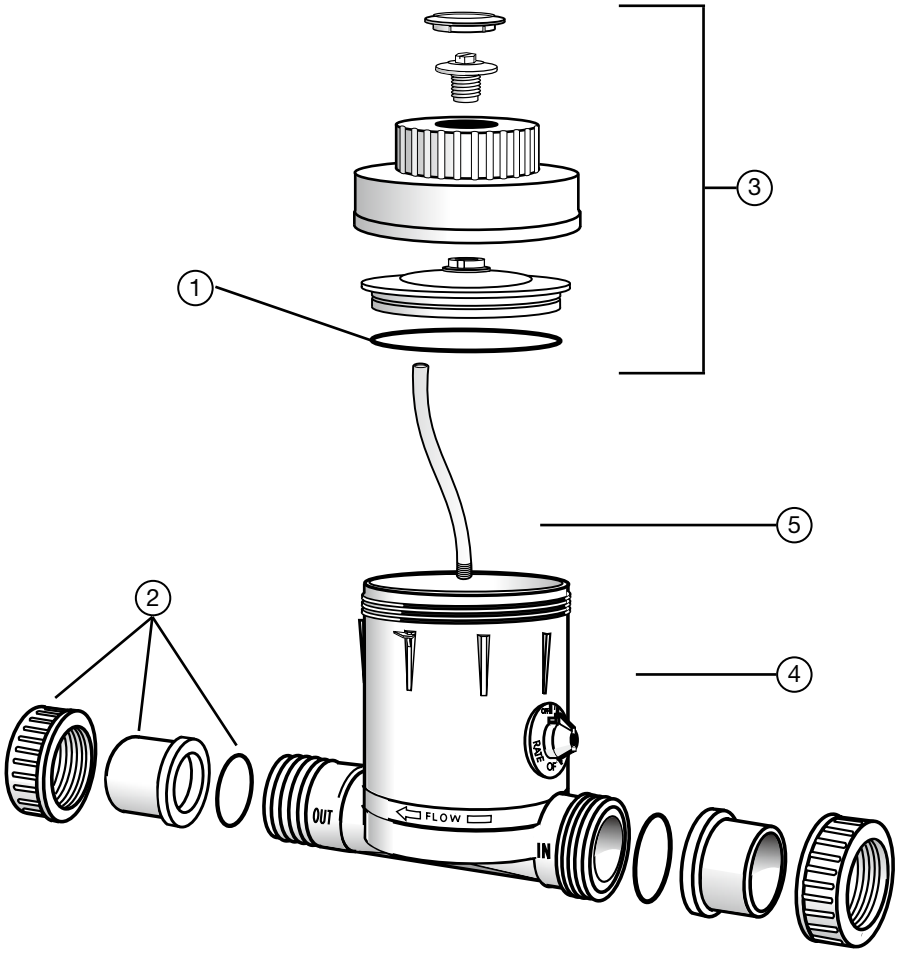

WATERCO
Water, the liquid of life

Waterco S75

Part Number	Product Description	Diagram No.	LIST PRICE
62411S	Deck lid Sandstone colour	1	£30.69
6241119S	Commercial deck lid assembly T/lock Sandstone GFABS	1	£42.61
624171S	Deck Lid MK2 (Suit Twist Lock Type) Sandstone	1	£37.52
624181S	Supaskimmer, S75 T/lock Square ring - Sandstone colour	2	£32.75
6241019S	Commercial dress ring T/lock Sandstone GFABS	2	£37.52
62410S	Dress ring Sandstone colour	2	£27.29
624191S	Round Dress Ring Twist Lock - Sandstone	2	£35.05
624105	Dress Ring Extension - 60mm	n/s	£6.38
62408	Vacuum plate (suits lock-down & press fit types) - 3 Lug	3	£26.61
62403	Leaf basket	4	£13.31
624032	Leaf basket lock down type	4	£13.31
62404	1½" Plug	6	£11.28
29260	Escutcheon Assembly Kit		£22.47
292631	Skimmer face plate	10	£9.61
29261	Gasket set (2)	11	£8.42
62444	Stainless steel screws (14) Each	n/s	£0.59
29264	Template	13	£0.61
29267	Screw cap set (14)	n/s	£3.00
62416	Weir door stop	8	£1.01
62407	Weir door assembly	9	£20.12
62412	Weir door clip	12	£3.00
62468	Vacuum plate o ring	n/s	£6.34
62438	Nutserts	n/s	£0.69
62421	Skimmer lintel	n/s	£14.46
62439	Escutcheon Clip		£2.62

** 29263 & 29267 replaced by 292631 & 62439

S75 SKIMMER BOX

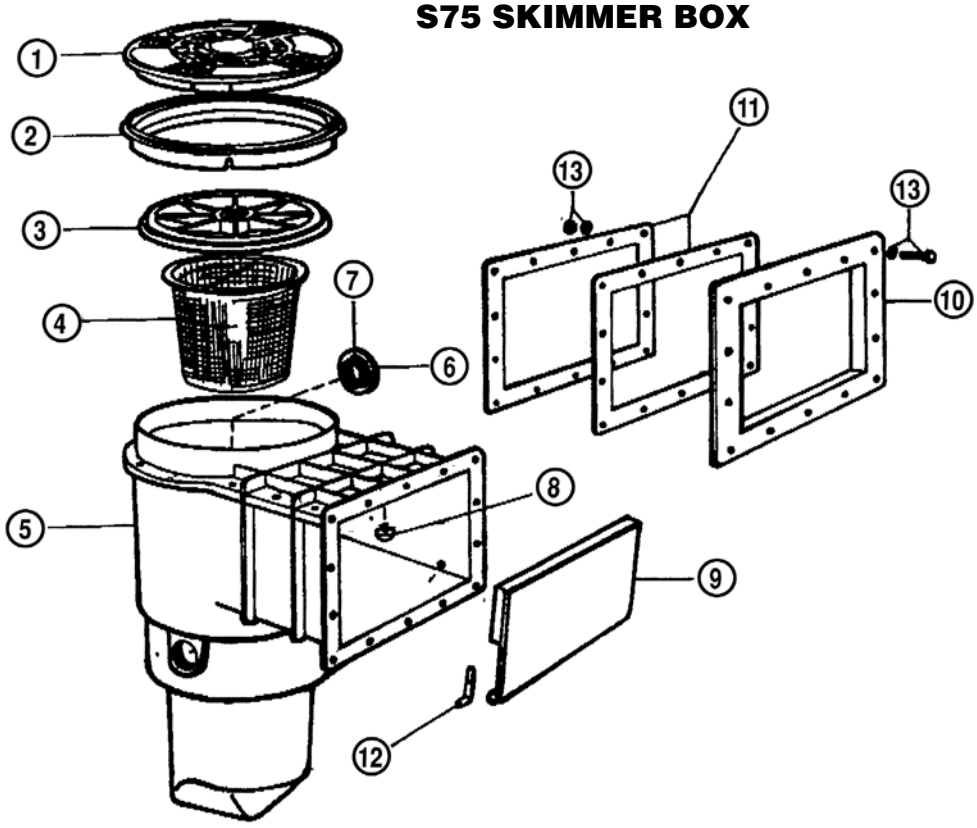

Part	Product Description	LIST
62411S	Deck lid Sandstone colour	£30.69
624171S	Deck lid MK2 (Suit T/lock type) Sandstone	£37.53
6241119S	Commercial deck lid assembly T/lock Sandstone GFABS	£42.61
6241019S	Commercial dress ring T/lock Sandstone GFABS	£37.53
62410S	Dress ring Sandstone colour	£27.29
624181S	Square dress ring T/lock Sandstone	£32.75
624191S	Round dress ring T/lock Sandstone	£35.05
624105	Dress Ring Extension - 60mm	£6.38
624024	Supa skimmer leaf basket	£20.12
62402	Fulfo leaf basket	£14.67
624084	Supa skimmer lock down vacuum plate	£27.40
62408	Vacuum plate	£26.61
62468	Vacuum plate o ring	£6.34
62407	Weir door assembly	£20.12
62412	Weir door clip	£2.14
62404	Plug 1½"	£11.28
29260	Escutcheon Assembly Kit	£22.47
292631	Face plate standard	£9.61
29261	Gasket set (2)	£8.42
62444	Stainless steel screw each	£0.59
29264	Template	£0.61
62439	Screw caps set (14)	£3.00
62426	Widemouth Escutcheon Kit	£36.95
62438	Nutserts (Each)	£0.77
	SKIMTROL - CONTROL VACUUM PLATE	
32730	Valve Spring	£6.67
32731	Valve Stem	£8.49
32732	Valve Strainer	£4.29

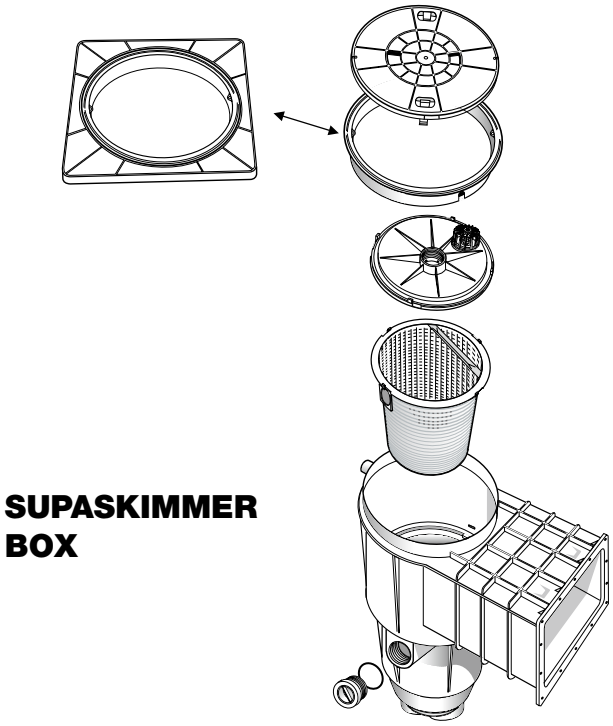

SUPASKIMMER BOX

FULFLO SKIMMER BOX

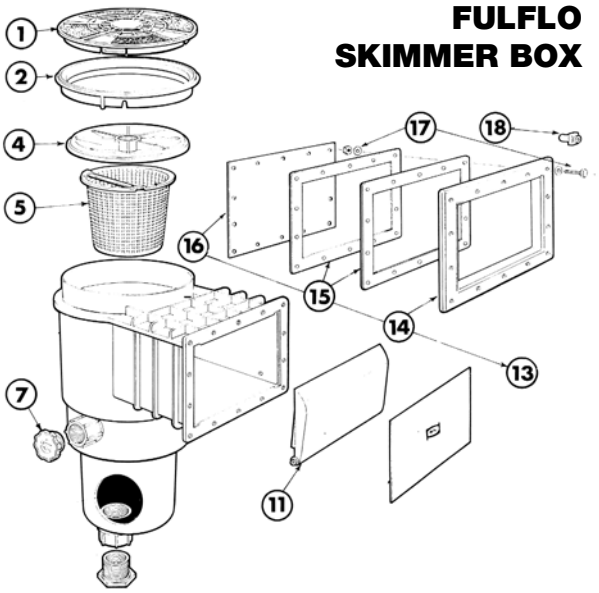

Waterco SP5000

Part Number	Product Description	Diagram No.	LIST PRICE
AXSM009	Deck lid - Beige	1	£21.69
AXSM009S	Deck lid - Sandstone	1	£16.81
AXSM075	Deck lid - Sandstone (suit lock down type)	n/s	£26.22
AXSM012	Dress ring - Beige	2	£16.27
AXSM012S	Dress ring - Sandstone	2	£12.28
AXSM073	Round dress ring - Sandstone T/lock (suit lock down type)	n/s	£13.95
AXSM074	Square dress ring - Sandstome T/lock (suit lock down type)	n/s	£25.33
AXSM025	Vacuum plate	3	£16.71
AXSM004	Skimmer body flow adjuster	4	£1.15
AXSM014	Skimmer basket	5	£10.13
AXSM006	Rubber buffer	6	£1.71
AXSM003	Adjustment slide skimmer body	7	£1.80
AXSM002	Skimmer body	8	£49.36
AXSM020	Skimmer weir door	9	£16.67
AXSM038	Escutcheon gasket	10	£6.70
AXSM032	Escutcheon plate	11	£8.68
AXSM028	Escutcheon kit assembly	n/s	£29.16
AXSM036	Escutcheon stainless steel screws	n/s	£0.23
AXSM042	Rubber plug for main drain & vac plate	n/s	£4.01
AXSM040	Extension throat body	n/s	£25.15
AC703	Cap for port	n/s	£0.47
AXSM039	Plug Escutcheon Plate (14 Pcs/Bag)		£3.99

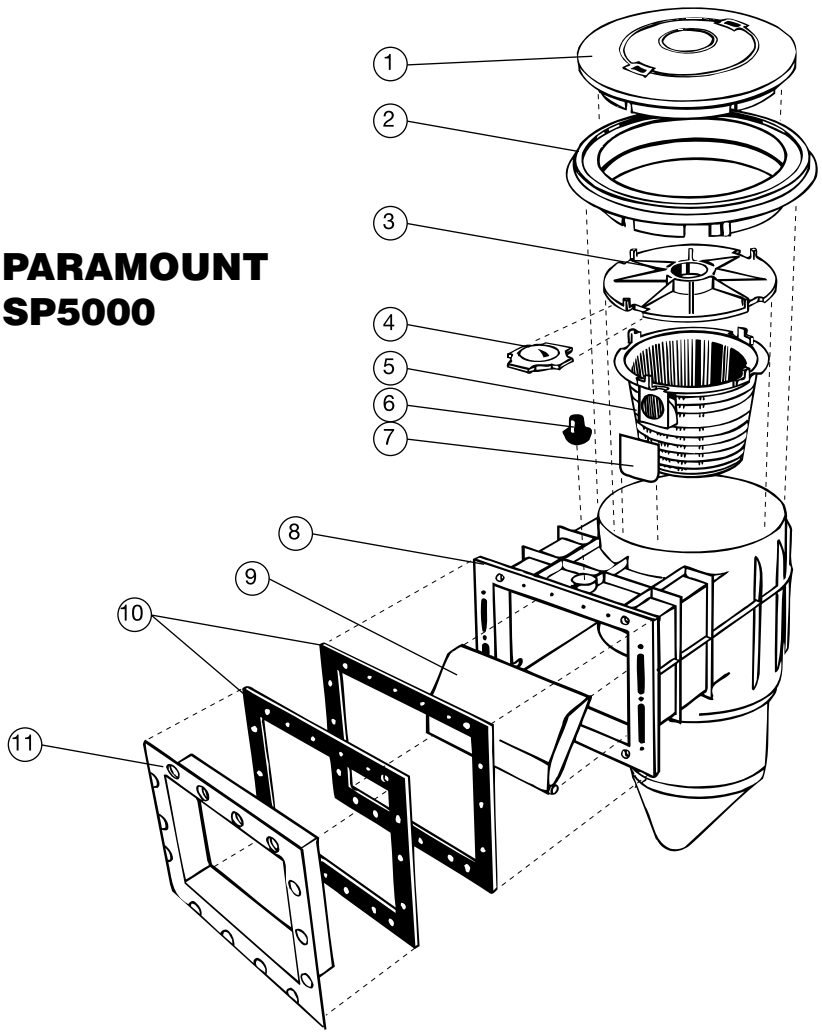

Part Number	Product Description	Diagram No.	LIST PRICE
29301	Main drain body	1	£13.98
29302	Hydrostatic valve	2	£8.19
29303	Cover & dress ring (white)	3	£12.28
29307	Cover & dress ring (beige)	3	£12.28
29304	Main drain stem	4	£6.91
29306	Screw & plug set (white)	n/s	£1.36
29305	Screw & plug set (beige)	n/s	£1.36

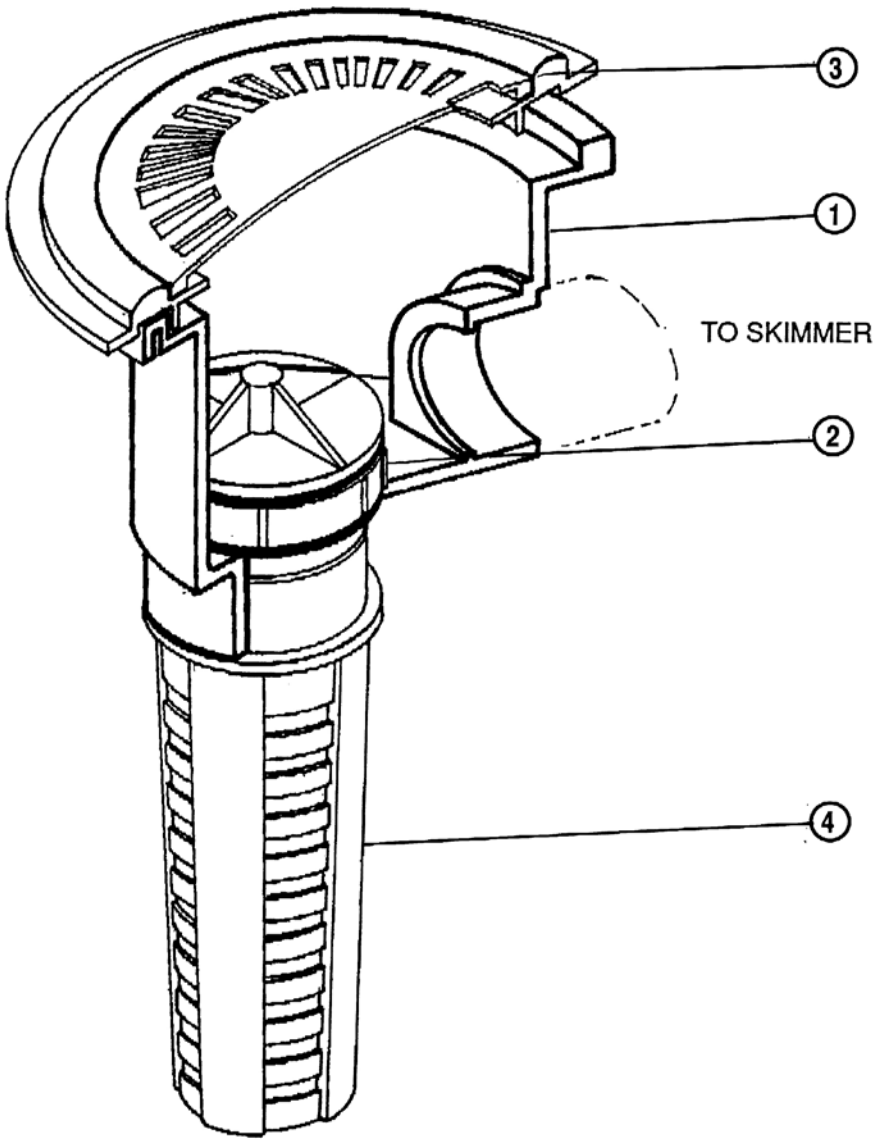

Auto Poolwater Leveller

Part Number	Product Description	Diagram No.	LIST PRICE
62270	Plastic float	1	£8.21
62271	3/8” float valve brass	2	£50.36
62272	3/8” x ½” brass bush	n/s	£11.03
62273	½” kinco nut	n/s	£3.45
62274	½” olive plastic	n/s	£0.87
AXSM009	Lid - Beige (Suit MK1 Leveller)	6	£21.69
AXSM009S	Lid - Sandstone (Suit MK1 Leveller)	6	£16.81
624171S	Deck Lid MK2 (Suit T/Lock Type) Sandstone	6	£37.53
AXSM012	Dress ring (Suit MK1 Leveller)	7	£16.27
AXSM012S	Dress ring - Sandstone (suit MK1 Leveller)	7	£11.98
624191S	Round Dress Ring T/Lock - Sandstone	7	£35.05

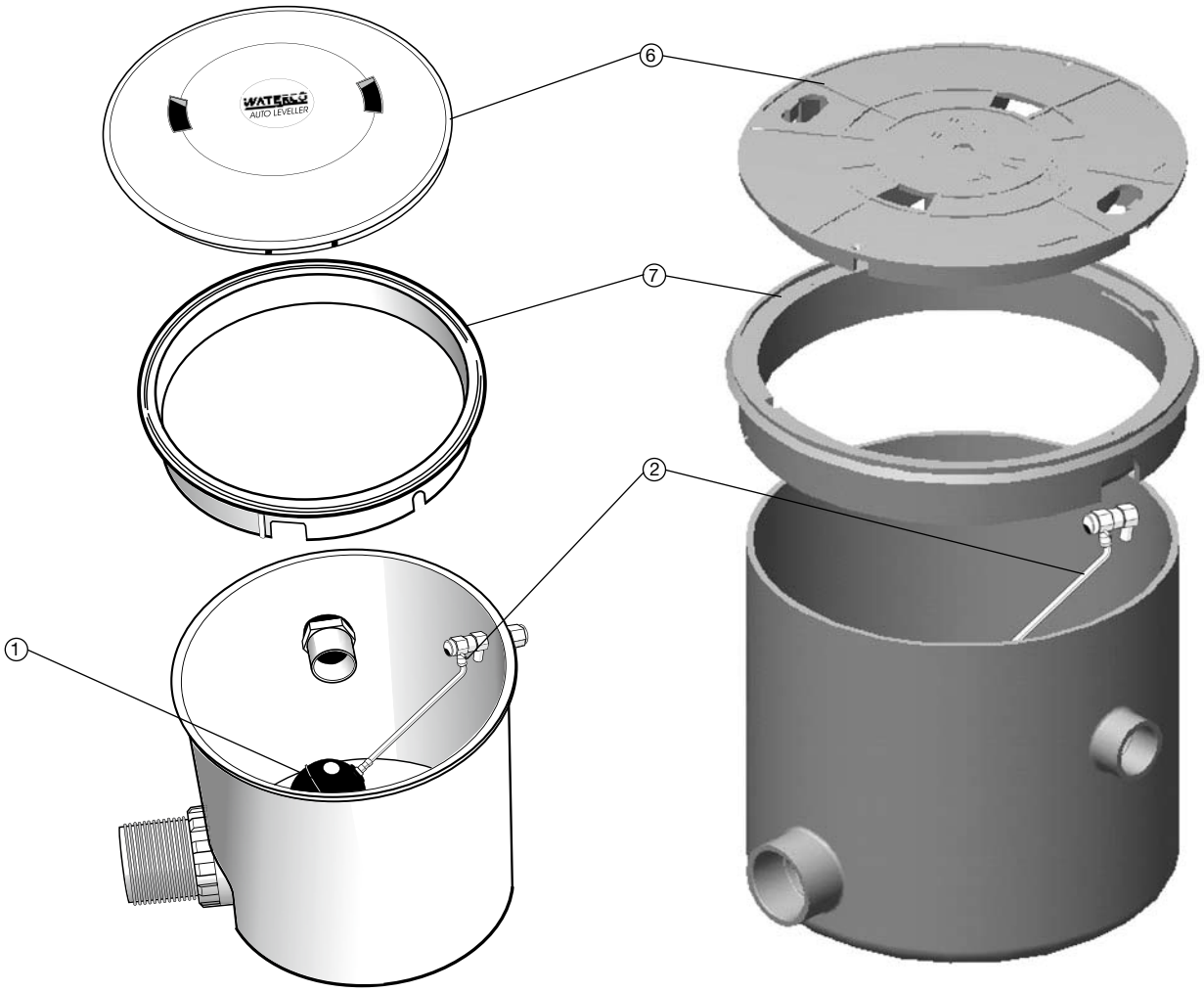

Part Number	Product Description	Diagram No.	LIST PRICE
S130501	Blower outer housing	1	£31.25
S07267L	Blower motor	2	£176.37
S130551	Blower motor mounting gasket	3	£1.11
S130581	Internal motor mount	4	£17.80
S130531	Blower bottom cowl	5	£18.05
S130511	Blower base (stand)	6	£11.05
S130571	Plug		£1.67
S13785	Blower motor brushes (each)		£37.69
S12811	Air Switch Latch		£56.98
82443911	Fair-Rite Suppression Core		£7.03
82443905	EMI Filter		£29.56

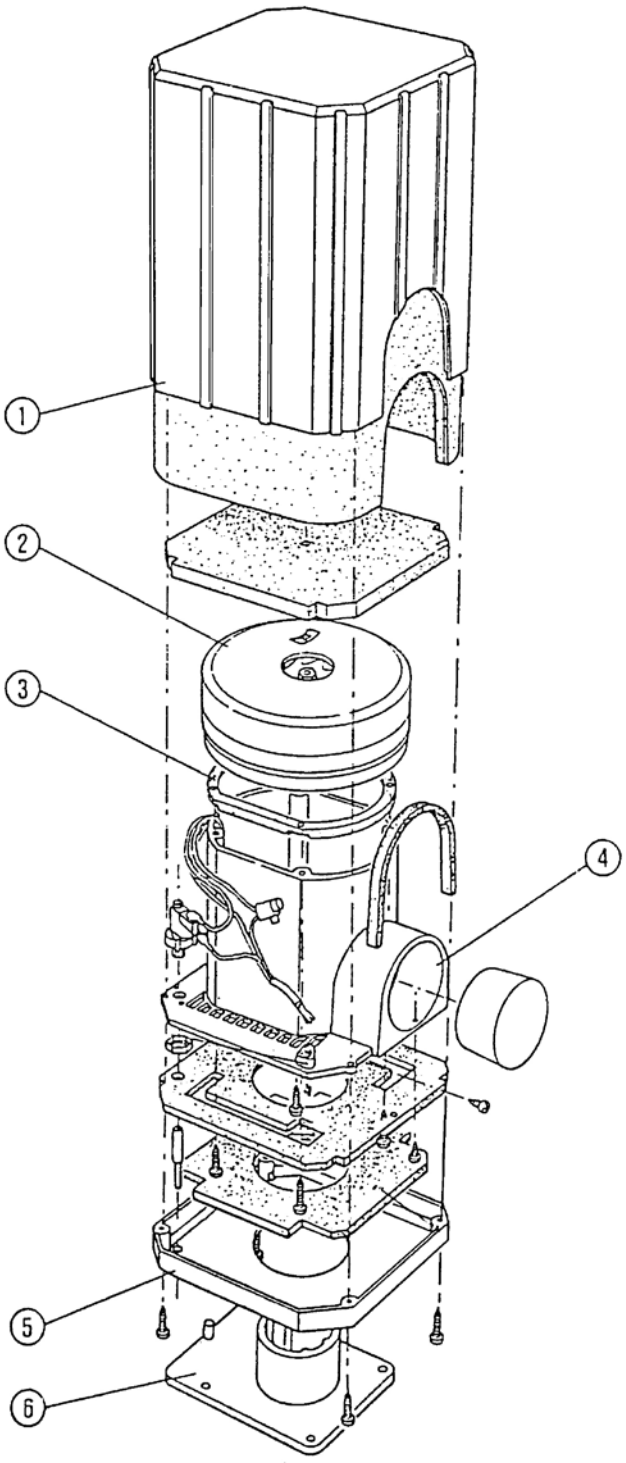

Underwater Pool Light

Part Number	Product Description	Diagram No.	LIST PRICE
65001	Light wall ring	1	£7.77
65002	Light bracket	2	£7.46
65012	Screw 8G x 13mm (each - 3 required)	3	£0.69
65012	Screw 8G x 13mm (each - 4 required)	4	£0.69
65012	Screw 8G x 13mm (each - 1 required)	5	£0.69
65004	Reflector Plate	7	£7.69
65006	Ceramic Terminal Block	8	£7.93
65007	Connector Block	9	£2.14
65013	S/S screw (connector block) 10g x 3/8 inch (each)	10	£0.69
65008	Light gasket	11	£11.41
65009	Lens – clear diffuser c/w rubber plug	12	£23.35
650102	Rim Pool Light MK3	13	£13.77
65014	Light S/S screw outer rim 10G x 5/8	14	£0.69
26603	Lens cover – blue	15	£7.85
26605	Lens cover – red	15	£7.85
26606	Lens cover – green	15	£7.85
650120	Screw 8G x 13mm (8 required)	16	£0.77
64603	Cable Tie	17	£0.18
646032	Cable Tie Clamp	18	£0.77
650051	Light globe 12V 100W	n/s	£14.30
650105	Adaptor Pool lights	n/s	£6.14
263080	UWL Replacement Kit - consists of:	2, 4-14, 16-18	£145.84
	13030 - Hose Clamp 6 - 12mm (2 required)	n/s	£5.36
	SB113402 - Tube PVC 8mm	n/s	£2.26
	861812 - Sleeve - 20mm long (2 required)	n/s	£0.18
65016	U/W light w/o lead and globe		£109.73
26500	Transformer 22volt	n/s	£85.28
26505	Transformer 12volt	n/s	£95.51
26503	Transformer 12volt plug in	n/s	£85.28
26601	Vinyl/fiberglass conversion kit	n/s	£15.69

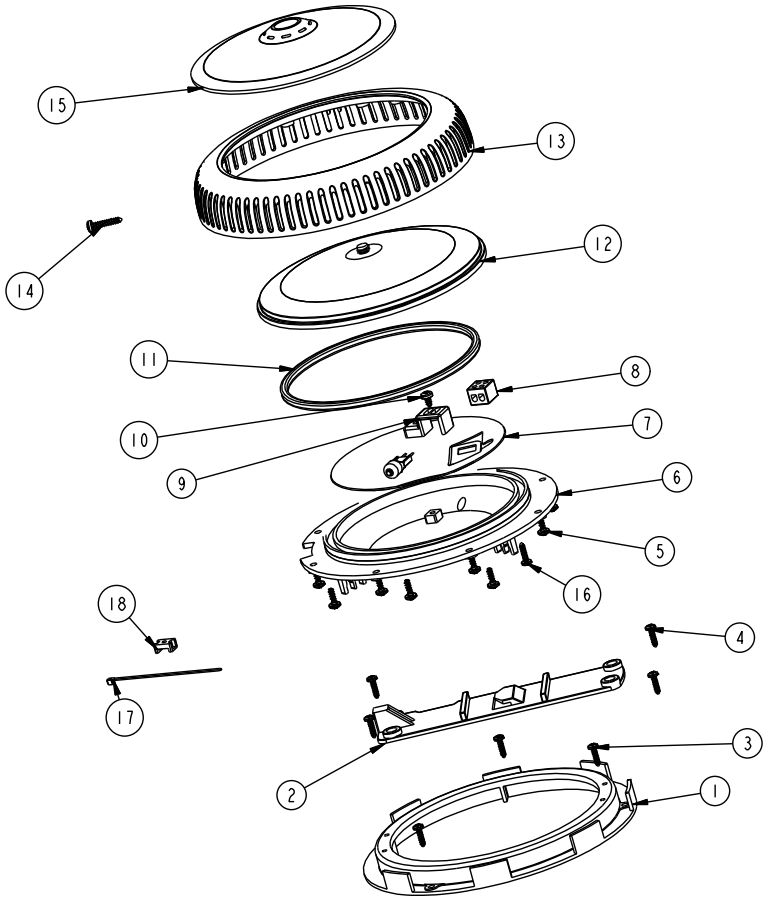

Part Number	Product Description	Diagram No.	LIST PRICE
650032	L/S Back Plate White		£6.96
65001	Litestream Wall Ring		£11.43
65002	Litestream Light Bracket		£10.92
650096	Lens Dress Ring 11mm		£4.45
65012	S/S Screw 8g X 5/8		£1.01
65014	S/S Screw 10g X 5/8		£1.01
650091	Rear lens cover		£9.17

BRITESTREAM LED NICHE LIGHT

Part Number	Product Description	Diagram No.	LIST PRICE
6501107	Gland Mount	3	£2.86
6501108	Gland Mount (for 12m cable)	3	£2.86
650152	Cable Gland	8	£2.66
6501124	Cable Gland (for 12m cable)	8	£4.25
6501122	Screw x 2	9	£1.14
6501121	Screw x 4	10	£0.65
6501117	O ring BS 025 x 2	11	£1.31
650153	O ring Metric 15 x 15	12	£0.21
6501125	O ring BS 019	12	£0.37
S13879	Terminal Female x 2	13	£0.53
6501130	Dress Ring	14	£28.23

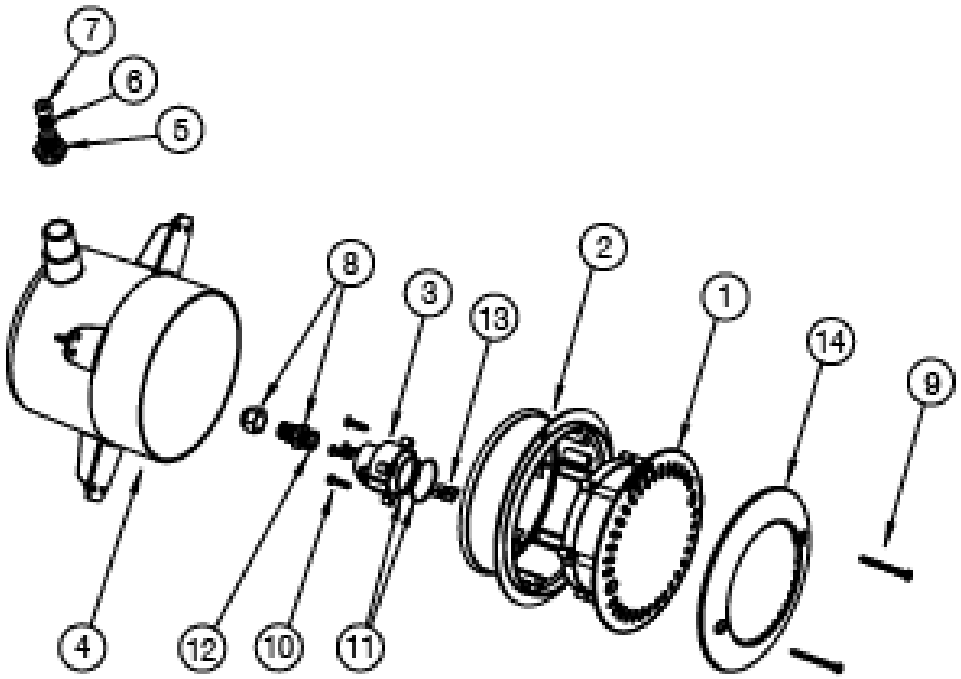

WATERCO
Water, the liquid of life

Underwater Spa Lights

Part Number	Product Description	Diagram No.	LIST PRICE
	UNDERWATER SPA LIGHT (rear access)		
26507	Lamp 12 volt 35 watt	1	£20.61
26506	Transformer 12 volt	2	£56.76
26508	2 meter lead and globe holder (cage not included)	3	£14.47
ASP092	Rear access spa light kit	4	£20.21
	UNDERWATER SPA LIGHT (front access)		
26507	Lamp 12 volt 35 watt	1	£20.61
26506	Transformer	2	£56.76
26508	2 meter lead and globe holder (cage not included)	3	£14.47
ASP094	Front access spa light kit	4	£20.21

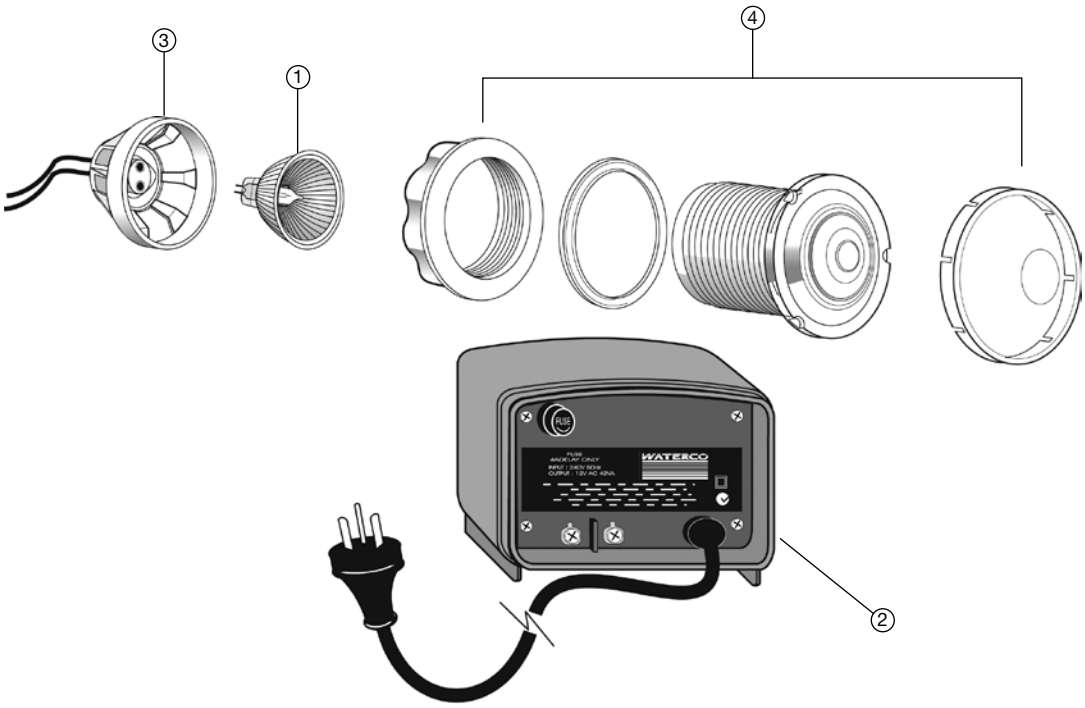

Part Number	Product Description	Diagram No.	LIST PRICE
10-1009	Compressor 1 phase (Model 75 -80)	1	£1,412.55
10-1105	Evaporator Insta/Turbo 70-80-85-101	2	£899.50
10-1215	Titanium Coil GR 2 / 240” Heat Exchanger	3	£587.67
10-1410	Capillary Kit Assembly - Insta 101	4	£84.99
05-1317	Capillary 36” - 6 required	4A	TBA
10-1302	Refrigerant Distributor 3/8” - 6 tubes	4B	TBA
10-1345	Filter/Dryer	4C	TBA
05-1219	Water In Canister Assembly 11”		£89.22
20-1300	Liquid Tight Connector 3/4” - 2 required	5	£11.62
20-1303	Clear Plastic Hose 1/8”ID x 1/4”OD (Pressure Switch) - 30” length	7	£0.07
20-1306	Nipple 1/8” Barb - 3 required	8	£1.01
20-1318	Thermostat Well	9	£2.03
80-1410	Canister Clamp	10	£26.64
80-1504	Canister O’Ring 7 1/4”	11	£6.68
80-1505	Water Inlet and Outlet O’Ring - 2 required	12	£0.48
20-1344	Coil Stabiliser - 6 required	13	£1.25
05-1220	Water Out Canister Assembly 11”		£68.54
20-1303	Clear Plastic Hose 1/8”ID x 1/4”OD - 11” length	7A	£0.07
20-1312	Plastic Cap 3/4” NPT - 2 required	14	£1.93
20-1801	Plastic Base	15	£157.35
20-1802	Top Panel	16	£150.20
20-1803	Front Panel	17	£148.29
20-1804	Left Side Panel	18	£71.52
20-1805	Right Side Panel	19	£71.52
20-1806	Electrical Box Cover	20	£21.16
30-1006	Fan Motor 1/6hp	21	£174.04
30-1103	Fan Blade 16”	22	£33.26
40-1002	High Pressure Switch 250-425PSI	23	£40.65
40-1003	Low Pressure Switch 25-50PSI	24	£45.12
05-1505	Digital Control Assembly	25	£378.71
40-0003	Digital Control Touch Pad	26	£14.16
40-1000	Digital Control with Thermocouple	27	£343.18
20-1516	Digital Control Sun Shade	28	£20.62
40-0001	Transformer 240/24-12V	29	£33.38
40-0002	24V Fan Relay	30	£12.52
40-1005	Defrost Control	31	£13.11
40-1006	Water Pressure Switch	32	£26.34
50-1008	Contactor 40A/24V/2 Poles	33	£49.95
50-1103	Fan Run Capacitor	34	£10.55
50-1104	Compressor Run Capacitor 40MFD 440VAC	35	£46.31
60-1112	Fan Grill	36	£86.96
1222414	1.5” NPT Threaded Barrel Union - 40mm Slip Fit Tail Piece (Black)	37	£11.15
40-1016	24V Time Delay - 3 min	38	£61.63
05-1219	11” Heat Exchanger Inlet Canister, all models		£89.22
20-1301	4” Heat Exchanger Outlet Canister, EH35, EH55		£29.33
05-1220	11” Heat Exchanger Outlet Canister, EH80		£68.54

* Parts are subject to availability

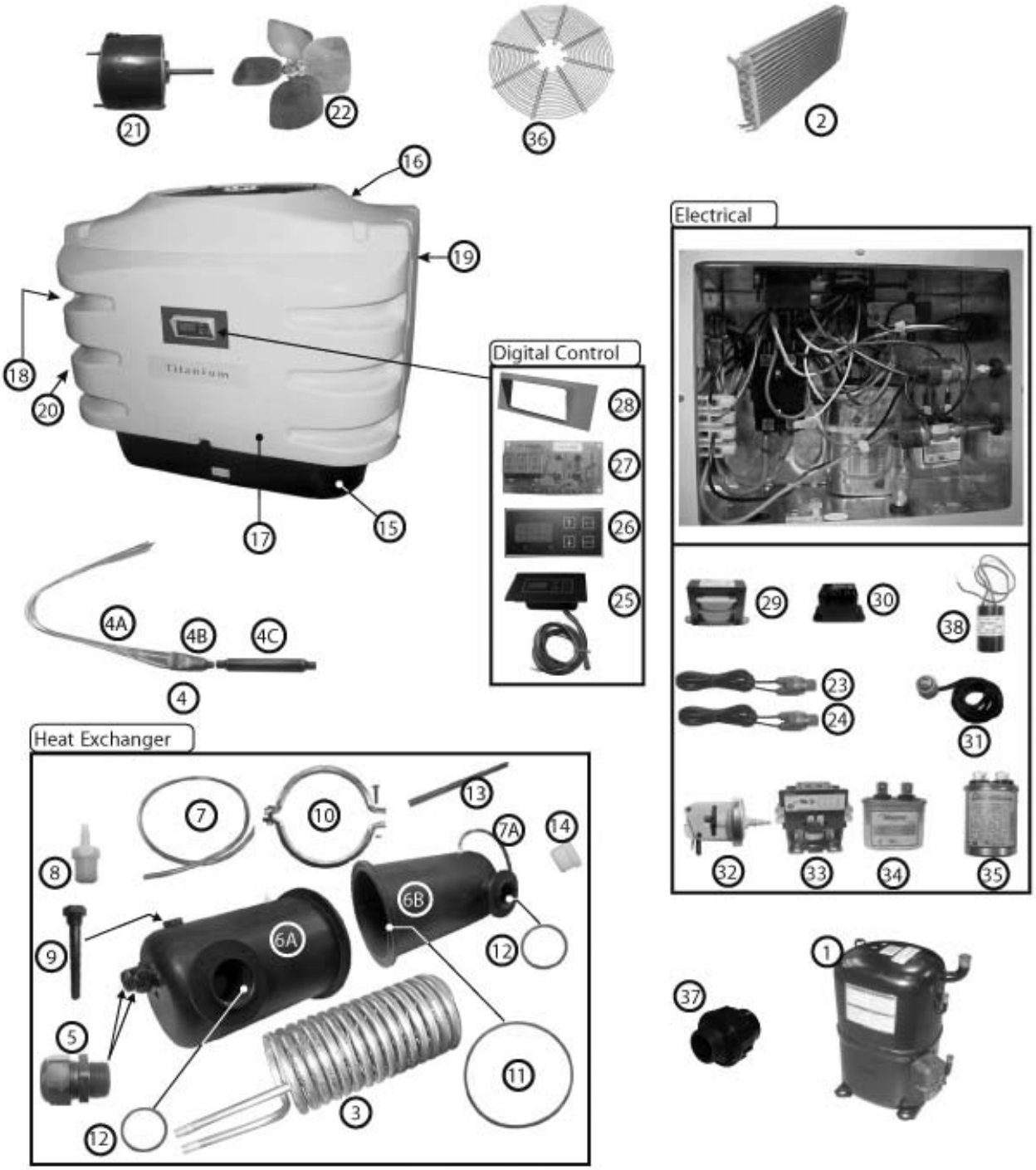
21
22
36
2
16
19
18
20
17
15
Digital Control
28
27
26
25
Electrical
4A
4B
4C
4
29
30
38
23
24
31
32
33
34
35
Heat Exchanger
7
10
13
7A
14
8
6B
9
6A
12
5
11
3
12
37
1

Part Number	Product Description	Diagram No.	LIST PRICE
05-1219	Water In Canister Assembly 11”		£89.22
20-1300	Liquid Tight Connector 3/4” - 2 required	1	£11.62
20-1306	Nipple 1/8” Barb - 3 required	3	£1.01
20-1318	Thermostat Well	4	£2.03
80-1504	Canister O’Ring 7 1/4”	5	£6.68
80-1505	Water Inlet and Outlet O’Ring - 2 required	6	£0.48
80-1410	Canister Clamp	7	£26.64
20-1303	Clear Plastic Hose 1/8”ID x 1/4”OD (Pressure Switch) - 41” length	8	£0.07
20-1344	Coil Stabiliser - 6 required	9	£1.25
05-1220	Water Out Canister Assembly 11”		£68.54
20-1303	Clear Plastic Hose 1/8”ID x 1/4”OD - 11” length	11	£0.07
20-1312	Plastic Cap 3/4” NPT - 2 required	12	£1.93
05-1505	Digital Control Assembly	13	£378.71
40-0003	Digital Control Touch Pad	14	£26.22
40-1000	Digital Control with Thermocouple	15	£343.18
20-1516	Digital Control Sun Shade	16	£20.62
10-1009	Compressor 1 phase (85 model)	17	£1,412.55
10-1011	Compressor 3 phase (85 model)	17	£2,087.90
10-1038	Compressor 3 phase (105 model)	18	£2,855.74
10-1013	Compressor 3 phase (125 model)	19	£3,432.74
10-1027	Compressor 3 phase (150 model)	20	£3,840.53
10-1107	Evaporator 25” x 75” (85 model)	21	£1,057.69
10-1108	Evaporator 30” x 84” (105, 125, and 150 model)	22	£1,296.57
10-1215	Titanium Coil GR 2 / 240” (85 model)	23	£587.67
10-1216	Titanium Coil GR 2 / 288” (105 model)	24	£705.20
10-1218	Titanium Coil GR 2 / 336” (125, 150 models)	24	£822.74
10-1302	Refrigerant Distributor 3/8” - 6 tubes	25	£5.42
10-1345	Filter/Dryer	26	£33.32
10-1351	Expansion Valve (150 model)	27	£289.84
05-1317	Capillary - 132” (85 model)	28	£42.35
05-1319	Capillary - 240” (105 model)	28	£40.65
05-1320	Capillary - 180” (125 model)	29	£45.25
10-1355	Orifice G6 (150 model)	30	£14.01
20-1207	Top Panel (85 model)	31	£206.58
20-1217	Top Panel (105, 125, and 150 models)	32	£259.18
20-1208	Front Panel (85 model)	33	£173.02
20-1218	Front Panel (105, 125, and 150 models)	34	£223.92
20-1209	Electrical Box Cover (85 model)	35	£35.31
20-1219	Electrical Box Cover (105, 125, 150 models)	36	£42.91
20-1500	Fan Motor Protective Cone	37	£41.09
20-1505	Base (85 model)	38	£171.65
20-1509	Base (105, 125, and 150 models)	39	£217.13
30-1003	Fan Motor 1/4hp (85 model)	40	£174.04
30-1012	Fan Motor 1/2hp (105, 125, and 150 models)	41	£233.16
30-1106	Fan Blade 20” (85 model)	42	£49.30
30-1107	Fan Blade 22” (105, 125, and 150 models)	43	£50.72
40-1000	Digital Control (Rectanglar)		TBA
40-1001	Electromechanical Thermostat		TBA
40-0002	24V Fan Relay	45	£12.52
40-1002	High Pressure Switch 250-425PSI	46	£40.65
40-1003	Low Pressure Switch 25-50PSI	47	£45.12
40-1004	Time delay 240v - 180 sec		TBA
40-1005	Defrost Control	48	£13.11
40-1006	Water Pressure Switch	49	£26.34
40-1006A	Water Pressure Switch Adjustable		TBA
40-1016	24V Time Delay - 3min	50	£61.63
50-1001	Contactor 30A/240v 2 Poles		£49.53
50-1002	Contactor 40A/220v 2 Poles		£53.69
50-1008	Contactor 40A/240v 2 Poles		£61.11
50-1011	Contactor 30A/240v 2 Poles		£25.23
40-0001	Transformer 240/24-12V	44	£33.38
50-1009	Contactor 40A/24V 3 Poles	51	£94.59
50-1103	Fan Run Capacitor (85 model)	52	£84.99
50-1116	Fan Run Capacitor (105, 125, and 150 models)	53	£15.50

Electroheat Plus

69501205	Green Light - 250V - 28” wires	54	£11.23
69601007	Evaporator Grill (85 model)	55	£10.01
69601008	Evaporator Grill (105, 125, and 150 models)	56	£10.01
69601103	Fan Grill (85 model)	57	£93.45
69601104	Fan Grill (105, 125, and 150 models)	58	£108.30
69601118	Supporting Rod (85 model) - 5 required	59	£5.19
69601119	Supporting Rod (105, 125, and 150 models) - 5 required	60	£5.24
69801617	Compressor Noise Reduction Cover (85 model)	61	£116.60
69801616	Compressor Noise Reduction Cover (105, 125, and 150 models)	62	£123.97
1222414	1.5” NPT Threaded Barrel Union - 40mm Slip Fit Tail Piece (Black)	63	£11.15

* Parts are subject to availability

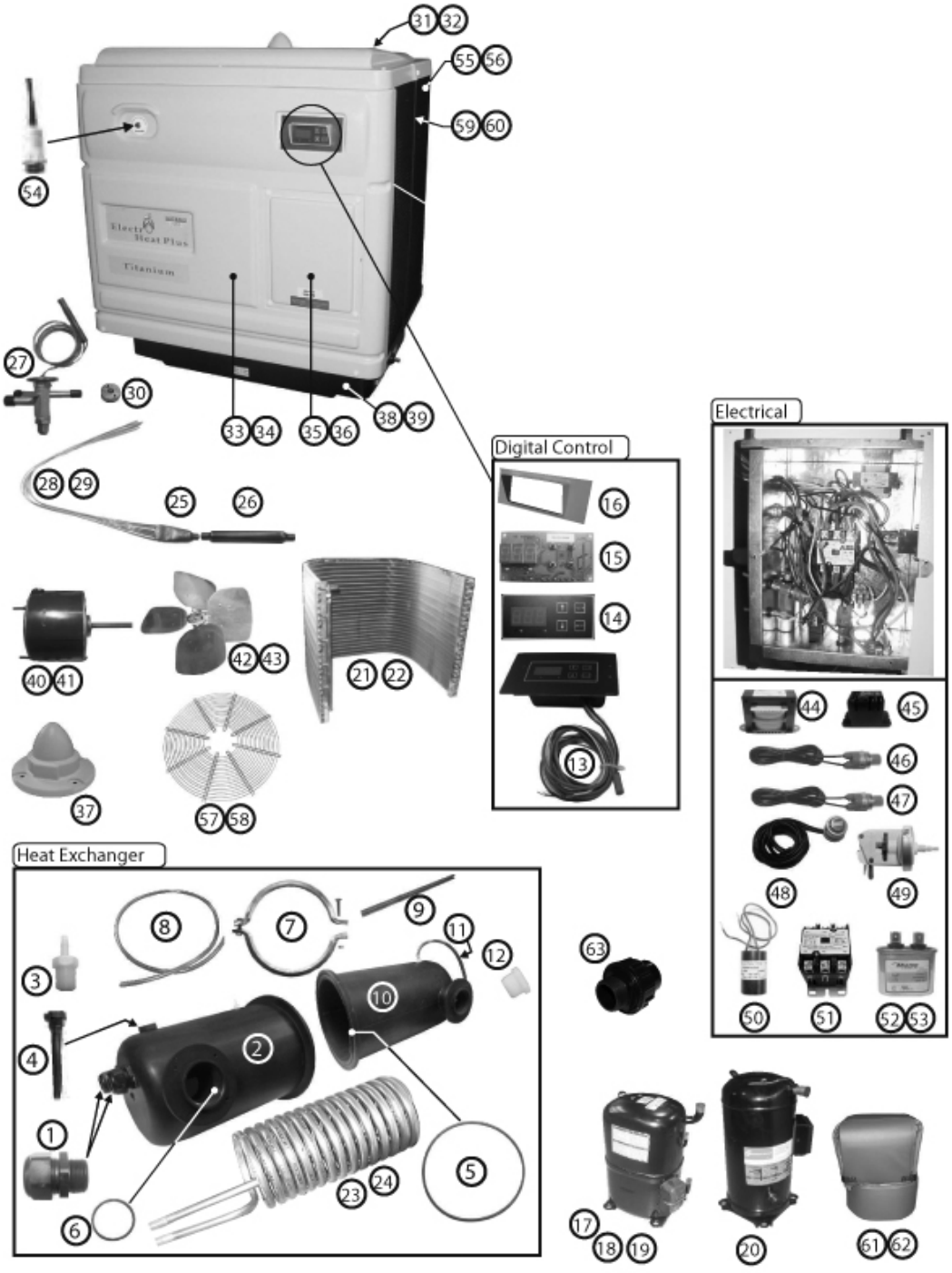

Part Number	Product Description	Diagram No.	LIST PRICE
	WATERCO FULFLO 2 & 3 WAY VALVES -1½"/2"		
14849	2/3 way valve handle (1), pin (2) & Spring (9)		£2.84
14848	2/3 way internal assembly inc seal (inc parts 8/10/11/12)	7	£10.88
	FPI 2 & 3 WAY VALVES - 1"/1¼"		
14850	Handle	1	£2.62
148480	Rotor Assembly	2	£10.43
14851	Lid	3	£2.38
663366	O' ring axle - BS118	5	£2.15
663367	Teflon Washer	6	£2.92
644791	O' ring lid - BS141	7	
663381	Screw TY-B 6.25 x 18.8mm	8	£0.18
63387	Handle pin lock	9	£0.89
1222252	Half Union 25mm Black	10	£3.93
644790	O'ring Half Union 25mm - BS218	10	£0.56
	FPI 2 & 3 WAY VALVES - 1½"/2" (50mm/63mm)		
66320	FPI 2/3 way valve internal assembly	15	£20.06
66325	FPI 2/3 way handle set	1,2,3,5	£12.70
66330	FPI 2/3 way o ring set	6,7,8,9	£11.34
66335	FPI 2/3 way valve change plate set	10,11	£11.34
	FPI 2 & 3 WAY VALVES - 2"/2½" (63mm/75mm)		
66381	Handle 3 way valve	1	£3.12
663383	Rotor assembly 2"/2½" 2/3 way valve	2	£13.89
66384	Lid 180 degree 2/3 way valve	3	£3.33
66385	Lid 360 degree 2/3 way valve	3	£3.33
663366	O'ring axle - BS118	5	£2.15
663367	Teflon Washer	6	£2.92
663393	O' ring lid - BS152	7	£2.38
63387	Handle pin lock	8	£0.89
663381	Screw TY-B 6.25 x 18.8mm	9	£0.18
663361	Handle Pin 6 x 30mm	10	£4.41
663362	Handle Spring	11	£3.28
	FPI 2 & 3 WAY VALVES - 2½"/3" (75mm/90mm)		
663390	Handle	1	£2.74
663396	Rotor Assembly	2	£18.00
663394	Lid	3	£5.72
663366	O'ring axle - BS118	5	£2.15
663367	Teflon Washer	6	£2.92
663395	O'ring axle - BS243	7	£1.25
663381	Screw TY-B 6.25 x 18.8mm	9	£0.18
644492	Half Union 2½"/3" c/w O ring	10	£10.05
63406554	O Ring Half Union 2½" BS338	10	£3.70
663361	Handle Pin 6 x 30mm	11	£4.41
663362	Handle Spring	12	£3.28

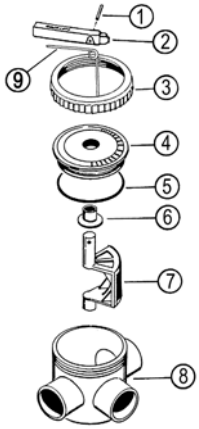

Fulflo 40mm Valve

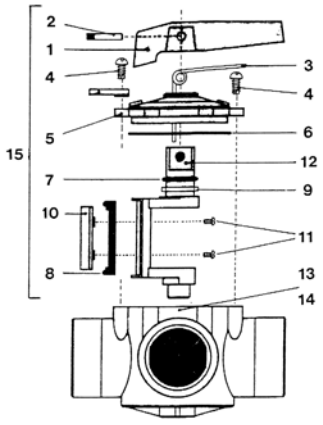

FPI 2 & 3 Way 40mm Valve

Elite Pool Cleaner

Part Number	Product Description	Diagram No.	LIST PRICE
50044	1M Hose		£12.18
50048	1M Hose (Pack of 10)		£96.66
50020	Swivel Kit		£16.93
50022	Hammer		£21.17
50024	Hammer Plate		£8.47
50026	Disc Skirt		£59.27
50028	Foot Pad		£38.10
50030	Bump Strip		£15.24
50032	Deflector Wheel		£13.97
50034	Weir Adaptor		£16.32
50036	45 Degree Connection		£21.22
50038	Clip on Weight		£22.02
50040	Relief Valve		£23.71
50042	Ballast Weight		£22.44

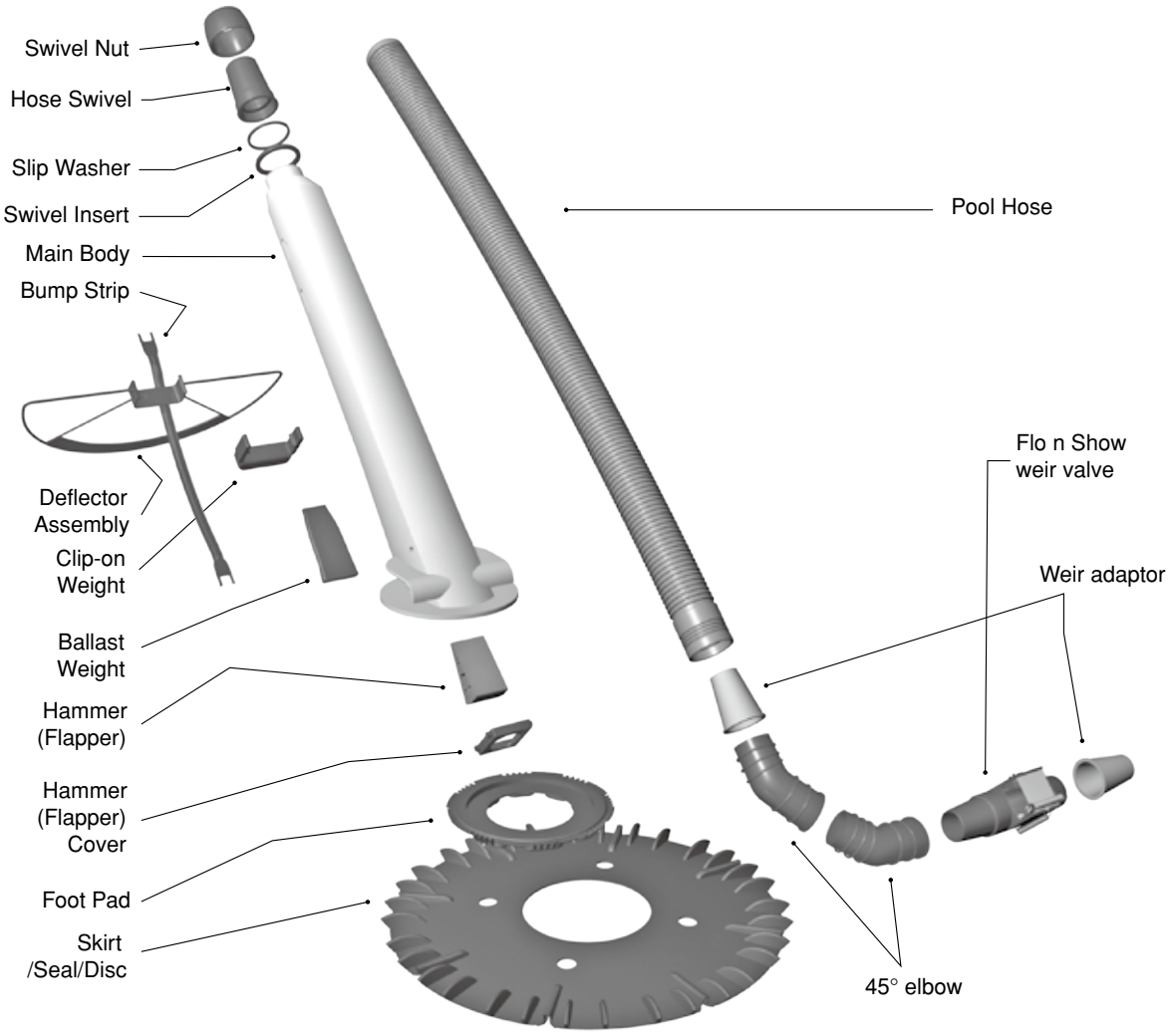

Part Number	Product Description	Diagram No.	LIST PRICE
	STONEWARE 8 LITRE & 12 LITRE		
7741065	Lid 12 Litre	1	£8.46
77410652	Lid 8 Litre	1	£8.46
7743808	Reservoir (bucket) 12 Litre	2	£17.31
77438081	Reservoir (bucket) 8 Litre	2	£17.31
7741066	Body 12 Litre	3	£68.40
77410661	Body 8 Litre	3	£58.66
77410662	Body 8 Litre (Post December 1999)	3	£58.66
7741067	Base (12 Litre only)	4	£25.45
7741062	Tap	5	£10.55
	PORCELAIN 10 LITRE		
77410654	Lid Porcelain 10 Litre		£19.01
77438084	Bucket Porcelain 10 Litre		£21.22
77410664	Body Porcelain 10 Litre		£54.71
7741062	Tap		£10.55
3648040	Gravity Candle		£13.26
3648050	Premium Gravity Candle		£18.96

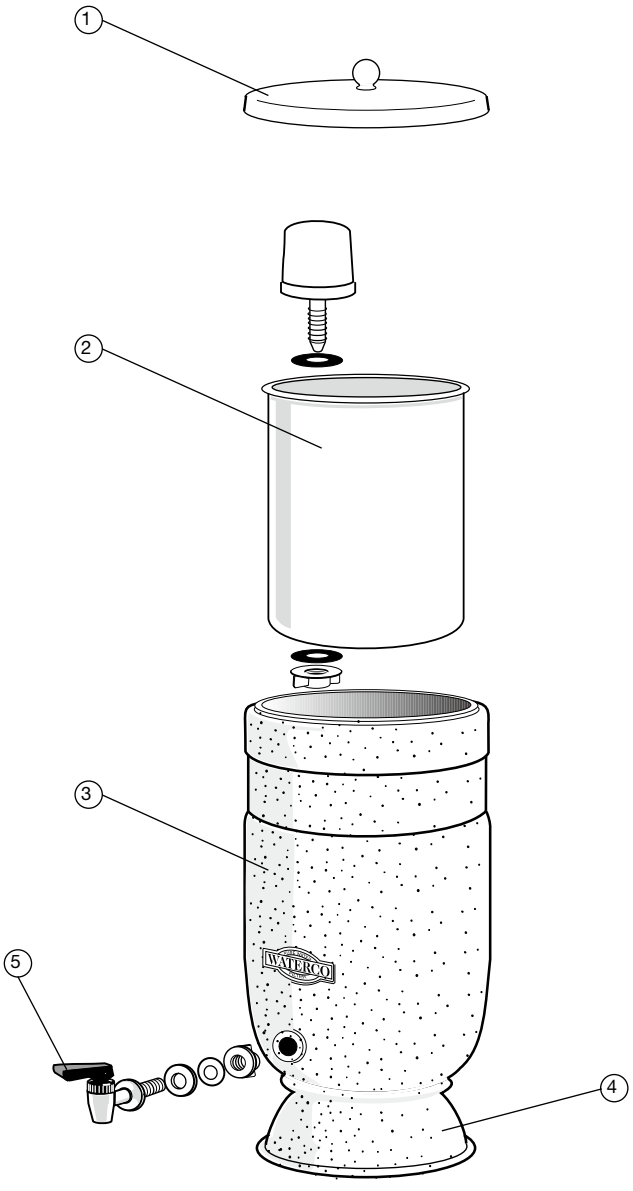

Clearware Water Purifier

Part Number	Product Description	Diagram No.	LIST PRICE
77410653	Lid Clearware 6 litre	1	£9.20
3648040	Gravity candle	n/s	£13.26
3648050	Premium Gravity Candle	n/s	£18.96
77410663	Body Clearware 6 litre	2	£70.02
77410673	Base Clearware 6 litre	3	£9.32
77438083	Bucket Clearware 6 litre	4	£7.42
7741062	Tap	5	£10.55

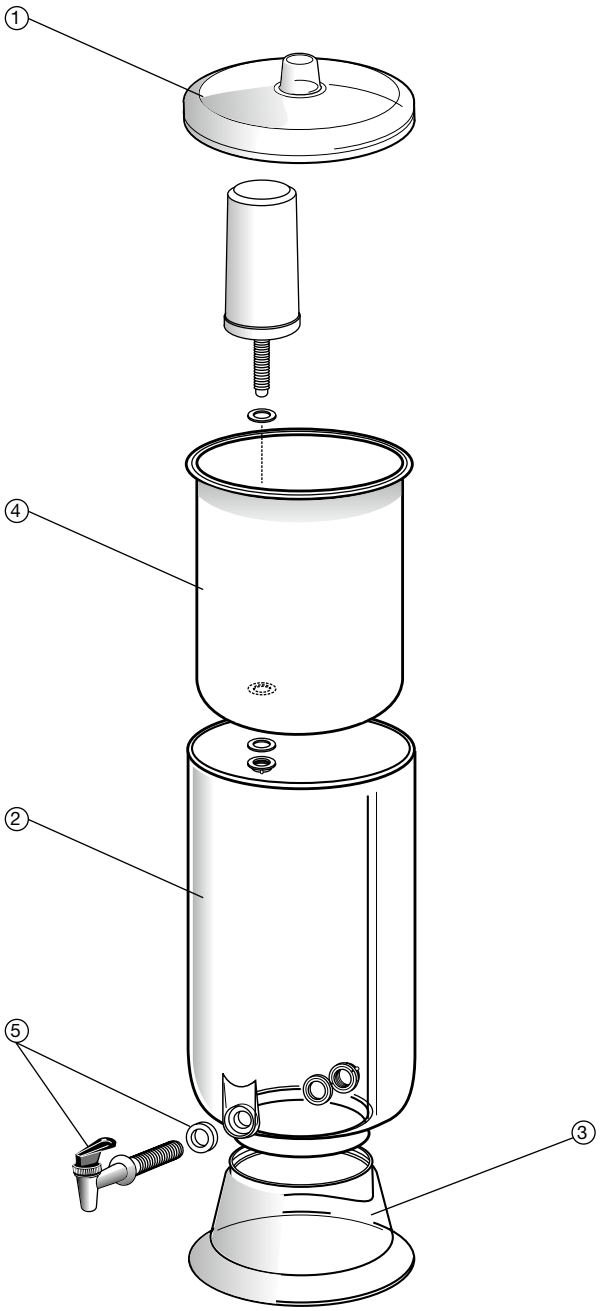

Part Number	Product Description	Diagram No.	LIST PRICE
	MODELS: S7, S7A, S14, S14A, W7A, W7V **SOFTENERS/PURIFIERS: PS4, PS4A, PS9, PS9A, P7, P7A, WPS4, WPS4A, WPS4V, PS9V** **CARBON UNITS: CU30, CU30A, CU40,CU40A, (same as FC30, FC30A, FC40, FC40A)** **SEDIMENT FILTERS: FS30, FS30A, FS40, FS40A**		
72512954	1/4 inch bolt BSW X 1 inch S/S S14A,PS9/A,FS40/A, CU40/A	1	£2.25
72521494	24 litre bottle S7/A, PS4/A,PS7/A,FS30/A,CU30/A	2	£140.53
72522559	40 Litre bottle S14/A, & V, PS9/A, FS40/A, CU40/A	2	£221.01
72511707	Plastic rivot	3	£1.78
72522061	Assembly tube S7/A, PS4/A, PS7/A, FS30/A, CU30/A	4	£10.64
72522582	Assembly tube S14/A,PS9/A, FS40/A, CU40/A	4	£10.64
72522521	A-10 valve assembly FS30/A, FS40/A, CU30/A, CU40/A	5	£108.55
72522066	A-10 valve assembly FS30/A, FS40/A, CU30/A,CU40/A	5	£108.55
72525276	A-10 valve assembly S14/A, PS9/A	5	£108.55
72591332	O ring (under A-10)		£2.54
72515485	Short drain elbow 3/8 x 1/2 BSP	6	£6.56
72522452	Outlet pipe 15mm w/o non return valve FS30/A, FS40/A, CU30/A, CU40/A	7	£5.28
72522451	Inlet pipe 15mm & non return valve S7/A, S14/A, PS4/A, PS9/A	7	£9.17
72512470	Clamp A-10 VALVE (40LT) bottle	8	£9.63
72522524	1 inch brass nipple outlet	9	£21.27
72522732	1 inch brass nipple & non return valve inlet	10	£37.53
72522452	Outlet pipe 15mm	11	£5.28
72525576	Outlet pipe and turbine (volumatic)	11	£137.72
725361334	24v transformer & plug	12	£40.97
72523516	Pressure relief valve closed (FS30/A, FS40/A, CU30/A, CU40/A	13	£9.77
72523134	Pressure relief valve (open) S7/A, S14/A, PS4/A, PS7/A, PS9/A	13	£8.79
72591315	Sabco timer	14	£36.85
72514825	Lid	15	£48.22
72514826	Salt port lid	16	£9.11
72514827	Adapter panel	17	£19.09
72512623	Timer motor 240v		£36.08
72525309	Solenoid, wires		£3.39
7259201300	20mm BSP x 13mm barbed male elbow	18	£1.46
72515043	Solenoid valve 24 volt	20	£38.50
72523059	Solenoid valve 240 volt	20	£29.76
72515615	Controller bracket (Volumatic Controller)	21	£13.35
72515045	Controller bracket (electronic timer)	21	£14.78
72515307	Controller bracket (mechanical timer)	21	£17.94
72515061	Brine tank 850mm high S14/A, PS9/A, FS40/A, CU40/A	22	£15.91
72515057	Vessel location panel	23	£17.08
72515623	Nylon nut 8mm		£1.22
72515624	Nylon bolt 8mm x 30mm		£1.73
72525630	Brine valve assembly S14/A, PS9/A	24	£41.81
72525629	Brine valve assembly S7/A, PS4/A, PS7/A	24	£40.23
72515114	Brine well cover w/ drilled holes	25	£4.35
72515113	Brine well cover blank	25	£4.35
72515129	Brine well 675mm long S7/A, PS4/A, PS7/A	26	£7.49
72515130	Brine well 865mm long S14/A, PS9/A	26	£9.75
72591011	O RING BSO11, compression unit	27	£0.37
72591213	O ring (inlet valve / outlet)	28	£0.53
72590112	Timer adapter (nylon) bush		£4.05
72515308	Cycle controller electromechanical 24 volt	30	£92.26
72525614	Volumatic controller	30	£345.83
72512085	Circlip large (2 required)	31	£3.99
72511295	Compression nut PVC (2 required)	32	£1.13
72525121	KIT F 14.47		£10.99

Waterite Cabinet - W7 Model

Part Number	Product Description	Diagram No.	LIST PRICE
72525619	24 litre bottle with base	2	£139.17
72515600	Bottle support bracket		£18.87
72515488	Waterite lid	15	£80.79
72515621	Salt port lid	16	£9.04
72515492	Adapter panel	17	£27.47
72515487	Brine tank (W7, W7A, W7V)	22	£207.85
72515622	Vessel locating panel		£8.82

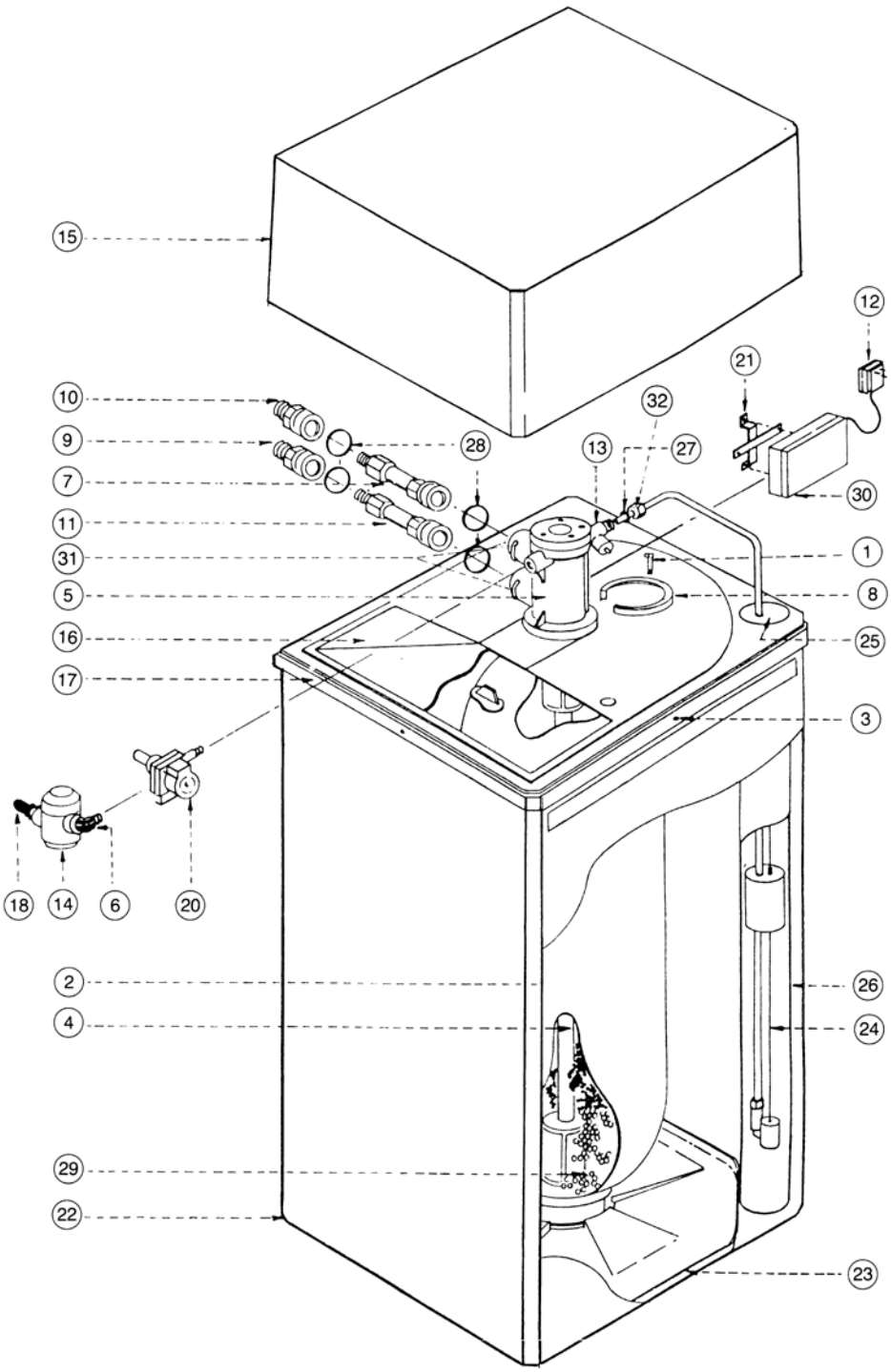

Part Number	Product Description	Diagram No.	LIST PRICE
7251780	Stainless steel screw (refer kit B)	1	£0.72
72525175	A10 valve body (purifier/softener)	2	£71.65
72522543	A10 valve body filter	2	£71.65
72512073	Top cover	4	£3.43
72512085	Circlip	5	£3.99
72523037	Assy screen & connector	10	£4.76
72591118	O ring centre tube	15	£0.69
72591332	O ring under A10 valve	16	£2.54
72525117	Kit B (1,6,7,8,13,14)		£17.14
72525118	Kit C (9,11,12) S14, S14A, PS9,T14,P30,PS20A		£8.77
72525119	Kit D (9,11,12)S7,S7A,PS4,PS4A,S17,PS10A		£8.77
72522066	A10 valve assembly (S7, S7A)		£108.55
72525276	A10 valve assembly (S14,S14A)		£108.55
72522521	A10 valve assembly (FS40/A,CU40/A,MB6,CF6)		£108.55
72525703	A10 valve assembly filter (MB6A,CF6A)		£108.55

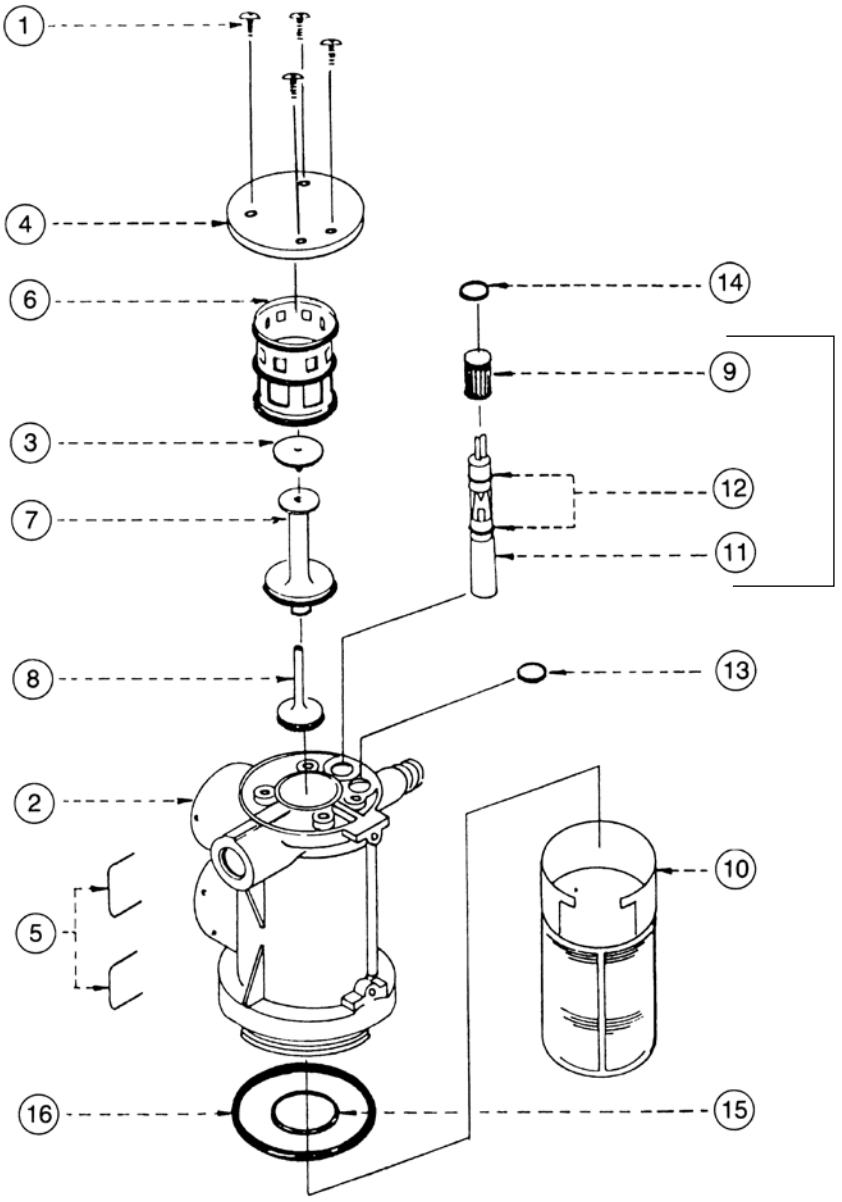

Kit C & D used in Softeners and Purifier Softeners Only

Domestic Brine Valve

Part Number	Product Description	Diagram No.	LIST PRICE
72504965	Plug	1	£1.25
72515580	Flow restrictor	2	£0.72
72515577	Body	3	£4.08
72515578	Brine valve nut seal	5	£1.17
72511408	Brine draw tube 40 litre 775mm	7	£3.30
72511407	Brine draw tube 24 litre 430mm	7	£2.62
72525608	Float	8	£1.33
72511292	Float stop	9	£1.33
72511287	Rod guide	10	£2.14
72525583	Assembly float rod 40 litre	11	£6.27
72525582	Assembly float rod 24 litre	11	£3.59
72515112	Coupler	12	£8.99
72511295	Nut	15	£1.13
72515581	Seal	16	£0.85
72591011	O ring	17	£0.37
72525626	Brine valve assembly 40 litre		£41.81
72525629	Brine valve assembly 24 litre		£40.23
72525627	Brine valve lower assembly 24 litre		£27.28
72525624	Brine valve lower assembly 40 litre		£28.91
72525639	Brine valve top assembly 24 litre	13	£13.00
72525163	Brine valve top assembly 40 litre	14	£12.84

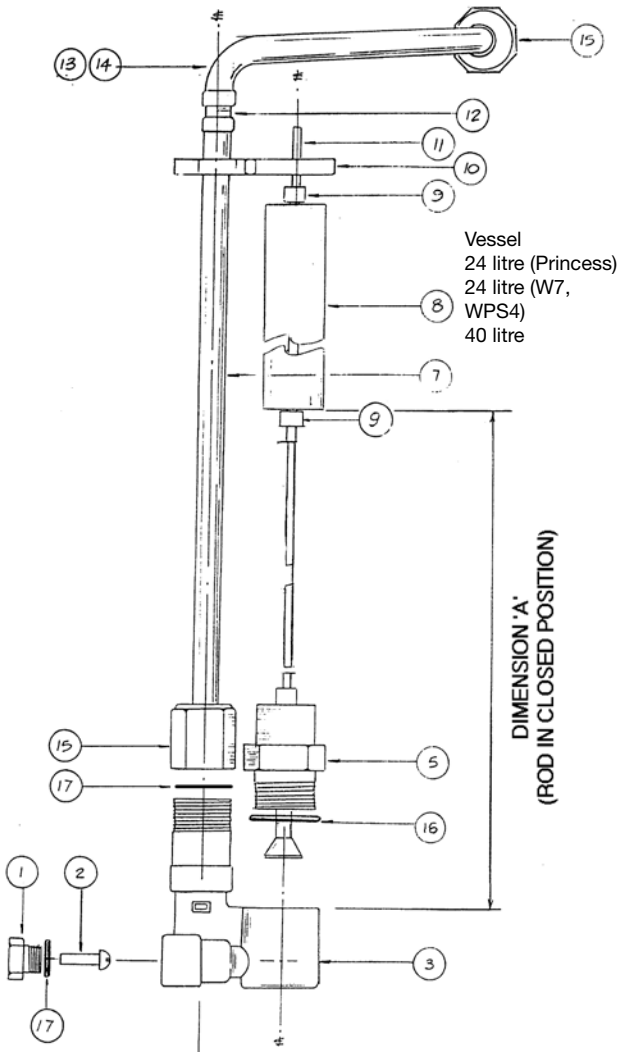

Vessel	Dimension 'A'
24 litre (Princess)	300mm
24 litre (W7, WPS4)	180mm
40 litre	645mm

Part Number	Product Description	Diagram No.	LIST PRICE
	COMMANDOMATIC BAG FILTER (TBF)		
3651931	1 micron filter bag - C50	10	£16.94
36519310	1 micron filter bag - C75	10	£21.40
3651924	5 micron filter bag - C50	10	£9.57
36519240	5 micron filter bag - C75	10	£21.40
3651925	25 micron filter bag - C50	10	£9.57
36519250	25 micron filter bag - C75	10	£21.40
3651926	50 micron filter bag - C50	10	£9.57
36519260	50 micron filter bag - C75	10	£21.40
36519265	800 micron filter bag - C50	10	£24.44
36519266	800 micron filter bag - C75	10	£29.20
	C50 - POST 01/2005 C75 - POST 01/2006		
62044130	Trimline Bag Filter C50 Tank Drilled	1	£77.84
62044180	Trimline Bag Filter C75 Tank Drilled	1	£286.32
6204417	Trimline Bag Housing Lid	2	£91.25
620262	O Ring G220	3	£7.75
620261	O Ring G220 - Viton	3	£14.90
620221	Air release valve	4	£1.85
6201931	Air release valve - Viton	4	£4.35
122257BLK	Half Union Trimline 2”/1½” Black (2 required)	5	£7.03
6340241	O Ring BS332 Half Union 2”	5	£1.19
620342	O Ring BS332 Half Union 2” - Viton	5	£3.87
3651947	Cage Ring	6	£66.22
3651946	Support Cage Filter Bag C50	7	£59.12
36519460	Trimline Bag Filter C75 Support Cage	7	£113.42
663379	# 12 x ¾” PT Screws (3 required)	8	£0.77
620263	O Ring BS266	9	£6.68
63814277	Screw M3 x 6 S/S 316 (4 required)	11	£0.30
621637	Pressure gauge side mount 800kPa	n/s	£25.15
36519450	Filter Bag Cage Assembly C50	6-9 & 11	£128.50
	C50 - PRE 01/2005 C75 PRE 01/2006		
620221	Air release valve		£3.30
62026	Lid o ring M3		£8.53
62024	Lock ring		£17.85
62025	Lid c/w o ring MK3		£36.33
621632	Pressure gauge (oil filled) side mount 400kPa		£24.50
3651945	Filter Bag Cage Assembly C50		£136.25

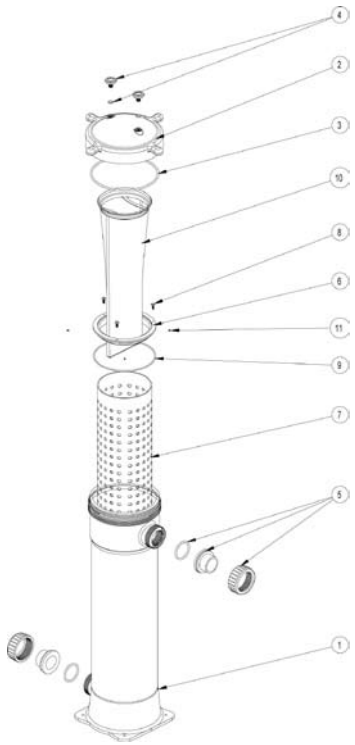

W & WD Series Deep Bed Filter

Part	Product Description	LIST
2247250	W 250 tank & under drain assembly	£344.73
22473001	W 300 tank & under drain assembly	£283.88
22473501	W 350 tank & under drain assembly	£393.85
22474001	W 400 tank & under drain assembly	£471.92
22475001	W 500 tank & under drain assembly	£564.19
22476001	W 600 tank & under drain assembly	£723.86
22477001	W 700 tank & under drain assembly	£1,043.20
22483001	WD 300 tank & under drain assembly	£378.64
22483501	WD 350 tank & under drain assembly	£498.03
22484001	WD 400 tank & under drain assembly	£607.19
22485001	WD 500 tank & under drain assembly	£723.17
22486001	WD 600 Tank & under drain assembly	£989.24
22487001	WD 700 tank & under drain assembly	£1,217.78
22472502	W 250 MK2 tank & under drain assembly (suit auto valve)	£223.03
22473011	W 300 Premium tank & under drain assembly (no drain)	£334.54
22473012	W 300 MK2 tank & under drain assembly (suit auto valve)	£363.27
6209302	Drain Plug 15mm Assembly	£16.09
621621	Pressure Gauge 110mm - 6 Bar	£134.61
855172	Adaptor A15 Clack Valve (Auto Valve)	£10.85

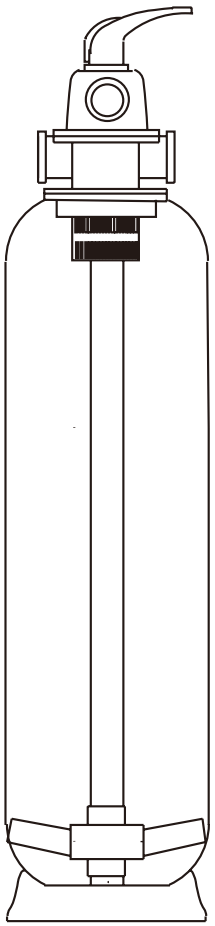

Part No:		620921	620922	620923	620924	620925	6209251	6208931
		LATERALS				Lateral End Cap (female)	Lateral End Plug (male)	HRZ Cross Tee
Model	Manifold	75mm	110mm	145mm	200mm			
W300/WD300	40mm	8	-	-	-	8	-	-
W350/WD350	40mm	8	-	-	-	8	-	-
W400/WD400	40mm	8	-	-	-	8	-	-
W500/WD500	40mm	-	8	-	-	8	-	-
W600/WD600	40mm	8	8	-	-	8	-	-